This is a digital copy of a book that was preserved for generations on library shelves before it was carefully scanned by Google as part of a project to make the world's books discoverable online.

It has survived long enough for the copyright to expire and the book to enter the public domain. A public domain book is one that was never subject to copyright or whose legal copyright term has expired. Whether a book is in the public domain may vary country to country. Public domain books are our gateways to the past, representing a wealth of history, culture and knowledge that's often difficult to discover.

Marks, notations and other marginalia present in the original volume will appear in this file - a reminder of this book's long journey from the publisher to a library and finally to you.

Usage guidelines

Google is proud to partner with libraries to digitize public domain materials and make them widely accessible. Public domain books belong to the public and we are merely their custodians. Nevertheless, this work is expensive, so in order to keep providing this resource, we have taken steps to prevent abuse by commercial parties, including placing technical restrictions on automated querying.

We also ask that you:

+ *Make non-commercial use of the files* We designed Google Book Search for use by individuals, and we request that you use these files for personal, non-commercial purposes.
+ *Refrain from automated querying* Do not send automated queries of any sort to Google's system: If you are conducting research on machine translation, optical character recognition or other areas where access to a large amount of text is helpful, please contact us. We encourage the use of public domain materials for these purposes and may be able to help.
+ *Maintain attribution* The Google "watermark" you see on each file is essential for informing people about this project and helping them find additional materials through Google Book Search. Please do not remove it.
+ *Keep it legal* Whatever your use, remember that you are responsible for ensuring that what you are doing is legal. Do not assume that just because we believe a book is in the public domain for users in the United States, that the work is also in the public domain for users in other countries. Whether a book is still in copyright varies from country to country, and we can't offer guidance on whether any specific use of any specific book is allowed. Please do not assume that a book's appearance in Google Book Search means it can be used in any manner anywhere in the world. Copyright infringement liability can be quite severe.

About Google Book Search

Google's mission is to organize the world's information and to make it universally accessible and useful. Google Book Search helps readers discover the world's books while helping authors and publishers reach new audiences. You can search through the full text of this book on the web at `http://books.google.com/`

SIGILLVM · VNIVERSITATIS · CALIFORNIENSIS
FIAT LVX
MDCCCLXVIII
EX LIBRIS

MACHINE DESIGN

BY

CHARLES H. BENJAMIN,
DEAN OF THE SCHOOLS OF ENGINEERING, PURDUE UNIVERSITY

AND

JAMES D. HOFFMAN
PROFESSOR OF MECHANICAL ENGINEERING AND PRACTICAL MECHANICS, UNIVERSITY OF NEBRASKA

NEW YORK
HENRY HOLT AND COMPANY
1913

Copyright, 1909
By
JAMES D. HOFFMAN

Copyright, 1906, 1913
By
HENRY HOLT AND COMPANY

THE·MAPLE·PRESS·YORK·PA

PREFACE

The present book represents the consolidation of two texts on this subject, Benjamin's Machine Design and Hoffman's Elementary Machine Design.

As now arranged, the book serves two purposes: That of a text for the classroom, embodying the theory and practice of design, and that of a reference book for the drafting room, illustrating the design of complete machines.

The authors recognize the fact that there are two methods of teaching this subject, one by details separately treated as elements, one by a consideration of the complete machine, *i.e.*, one method is synthetic and one analytic. It is believed that this book will afford a means of using either method or both combined.

Some important additions to the text are worthy of mention. Chapter II, on Materials, has been rewritten. Much additional matter on the subject of cast-iron frames has been introduced, involving the results of numerous experiments. The theoretical and experimental strength of steel tubes under collapsing pressures is quite fully discussed and additional data are given on the failure of pipe fittings.

Other subjects which receive in this volume fuller treatment than heretofore are Flat plates, Crane hooks, Leaf springs, Bearings, both plain and rolling, Clutches, Gear teeth and Belting.

302098

TABLE OF CONTENTS

CHAPTER PAGE

INTRODUCTION.—UNITS AND FORMULAS 1
1. Units. 2. Abbreviations. 3. Notation. 4. Formulas. 5. Profiles of uniform strength.

I. MATERIALS 9
6. Primary classification. 7. Iron. 8. Steel. 9. Steel alloys. 10. Copper alloys. 11. Strength and Elasticity.

II. FRAME DESIGN 21
12. General principles of design. 13. Machine supports. 14. Machine frames. 15. Tests on simple beams. 16. Shapes of frames. 17. Stresses in frames. 18. Professor Jenkin's experiments. 19. Purdue tests. 20. Principles of design.

III. CYLINDERS AND PIPES 50
21. Thin shells. 22. Thick shells. 23. Steel and wrought iron pipe. 24. Strength of boiler tubes. 25. Theory. 26. Tube joints. 27. Tubes under concentrated loads. 28. Pipe fittings. 29. Flanged pittings. 30. Steam cylinders. 31. Thickness of flat plates. 32. Steel plates.

IV. FASTENINGS 91
33. Bolts and nuts. 34. Crane hooks. 35. Riveted joints. 36. Lap joints. 37. Butt joint with two straps. 38. Efficiency of joints. 39. Butt joints with unequal straps. 40. Practical rules. 41. Riveted joints for narrow plates. 42. Joint pins. 43. Cotters.

V. SPRINGS 107
44. Helical springs. 45. Square wire. 46. Experiments. 47. Springs in torsion. 48. Flat springs. 49. Elliptic and semi-elliptic springs.

VI. SLIDING BEARINGS 120
50. Slides in general. 51. Angular slides. 52. Gibbed slides. 53. Flat slides. 54. Circular guides. 55. Stuffing boxes.

VII. JOURNALS, PIVOTS AND BEARINGS 128
56. Journals. 57. Adjustment. 58. Lubrication. 59. Friction of journals. 60. Limits of pressure. 61. Heating of journals. 62. Experiments. 63. Strength and stiffness of journals. 64. Caps and bolts. 65. Step bearings. 66. Friction of pivots. 67. Flat collar. 68. Conical pivot. 69. Schiele's pivot. 70. Multiple bearing.

CHAPTER PAGE

VIII. BALL AND ROLLER BEARINGS 153
71. General principles. 72. Journal bearings. 73. Step bearings. 74. Materials and wear. 75. Design of bearings. 76. Endurance of ball bearings. 77. Roller bearings. 78. Grant roller bearings. 79. Hyatt rollers. 80. Roller step bearings. 81. Design of roller bearings.

IX. SHAFTING, COUPLINGS AND HANGERS 167
82. Strength of shafting. 83. Combined tension and bending. 84. Couplings. 85. Clutches. 86. Automobile clutches. 87. Coupling bolts. 88. Shafting keys. 89. Strength of keyed shafts. 90. Hangers and boxes.

X. GEARS, PULLEYS AND CRANKS 186
91. Gear teeth. 92. Strength of gear teeth. 93. Lewis' formula. 94. Experimental data. 95. Modern practice. 96. Teeth of bevel gears. 97. Rim and arms. 98. Sprocket wheels and chains. 99. Silent chains. 100. Cranks and levers.

XI. FLY-WHEELS 204
101. In general. 102. Safe speed for wheels. 103. Experiments on fly-wheels. 104. Wooden pulleys. 105. Rims of cast-iron gears. 106. Rotating discs. 107. Plain discs. 108. Conical discs. 109. Discs with logarithmic profile. 110. Bursting speeds. 111. Tests of discs.

XII. TRANSMISSION BY BELTS AND ROPES 221
112. Friction of belting. 113. Slip of belt. 114. Coefficient of friction. 115. Strength of belting. 116. Taylor's experiments. 117. Rules for width of belts. 118. Speed of belting. 119. Manila rope transmission. 120. Strength of Manila ropes. 121. Cotton rope transmission. 122. Wire rope transmission.

XIII. DESIGN OF TOGGLE-JOINT PRESS 235
123. Introductory. 124. Drawings. 125. Calculations. 126. Analysis of forces. 127. Design of lever. 128. Shapes of levers. 129. Hole in lever. 130. Fastening for standard. 131. Design of standard. 132. Toggle joint. 133. Shapes of toggle members. 134. Die heads. 135. Frame or bed. 136. Stability of frame. 137. Toggle press. 138. Vertical hand-power press. 139. Foot-power press. 140. Hand-power punch. 141. Punch and shear.

XIV. DESIGN OF BELT-DRIVEN PUNCH OR SHEAR 265
142. General statement. 143. Requirements of design. 144. Design of frame. 145. Outline of frame. 146. Shearing force. 147. Depth of cut. 148. Sizes of pulleys. 149. Weight of fly-wheel. 150. Driving shaft. 151. Gears. 152. Main shaft. 153. Sliding head. 154. Clutches and transmission devices.

CHAPTER PAGE

155. Punch, die and holders. 156. The bevel shear. 157. Horizontal power punch. 158. The bull-dozer. 159. Power press. 160. Rotary shear. 161. Sheet metal flanger. 162. Flanging machine.

XV. DESIGN OF AIR HOIST AND RIVETER 299
163. Air hoist. 164, 165. Portable riveter. 166. Alligator riveter. 167. Mud-ring riveter. 168. Lever riveter. 169. Hydraulic riveter. 170. Triple pressure hydraulic riveter.

XVI. STUDIES IN THE KINEMATICS OF MACHINES 309
171. Gear tooth outlines. 172. Planer cam. 173. Sewing machine cam. 174. Sewing machine bobbin winder. 175. Constant diameter cam. 176, 177, 178, 179. Quick return motions. 180. Cam and oscillating arm. 181. Two-motion cam. 182. Conical cam. 183, 184. Motion problems. 185. Forming machine for wire clips. 186–202. Motion problems. 203. Mechanism of inertia governor. 204. Mechanism of centrifugal governors. 205. Straight line governor. 206. Stephenson link motion. 207. Walschaert valve gear.

INDEX 336

MACHINE DESIGN

TABLES

Table		Page
I.	Values of q in Column Formula	4
I a.	Values of S and K in Column Formula	5
II.	Constants of Cross-section	6
III.	Formulas for Loaded Beams	7
IV.	Classification of Metals	9
V.	Composition of Bronzes	16
VI.	Strength of Wrought Metals	18
VII.	Strength of Cast Metals	19
VIII.	Strength of Cast Iron Beams	30
IX.	Strength of Cast Iron Beams	32
X.	Strength of Cast Iron Beams	33
XI.	Strength of Cast Iron Beams	35
XII.	Stresses in Machine Frames	38
XIII.	Strength of Riveter Frames	41
XIV.	Strength of Riveter Frames	44
XV.	Sizes of Iron and Steel Pipe	56
XVI.	Sizes of Extra Strong Pipe	58
XVII.	Sizes of Double Extra Strong Pipe	59
XVIII.	Sizes of Iron and Steel Boiler Tubes	60
XIX.	Collapsing Pressure of Tubes	64
XX.	Stiffness of Steel Hoops	70
XXI.	Strength of Standard Screwed Pipe Fittings	72
XXII.	Strength of Flanged Fittings	74
XXIII.	Bursting Strength of Cast Iron Cylinders	80
XXIV.	Strength of Reinforced Cylinders	82
XXV.	Strength of Cast Iron Plates	86
XXVI.	Strength of Cast Iron Plates	87
XXVII.	Stresses in Flat Plates	89
XXVIII.	Strength of Iron or Steel Bolts	91
XXIX.	Dimensions of Machine Screws	94
XXX.	Elastic Limit of Crane Hooks	94
XXXI.	Dimensions of Riveted Lap Joints	101
XXXII.	Dimensions of Riveted Butt Joints	101
XXXIII.	Strength and Stiffness of Helical Springs	110
XXXIV.	Friction of Piston Rod Packings	126
XXXV.	Friction of Piston Rod Packings	126
XXXVI.	Friction of Piston Rod Packings	127
XXXVII.	Friction of Journal Bearings	139
XXXVIII.	Tests of Large Journals	140

Table		Page
XXXIX.	Marine Thrust Bearings	151
XL.	Friction of Roller and Plain Bearings	161
XLI.	Coefficients of Friction	161
XLII.	Coefficients of Friction	162
XLIII.	Safe Loads for Roller Bearings	164
XLIV.	Safe Loads for Roller Step Bearings	165
XLV.	Values of k for Roller Thrust Bearings	166
XLVI.	Diameters of Shafting	168
XLVII.	Power of Clutches	177
XLVIII.	Efficiency of Keyed Shafts	181
XLIX.	Proportions of Gear Teeth	187
L.	Sizes of Test Fly-wheels	208
LI.	Sizes of Test Fly-wheels	209
LII.	Flanges and Bolts of Test Fly-wheels	209
LIII.	Failure of Flanged Joints	210
LIV.	Sizes of Linked Joints	210
LV.	Failure of Linked Joints	210
LVI.	Bursting Speeds of Rotating Discs	218
LVII.	Bursting Speeds of Rotating Discs	219
LVIII.	Horse-power of Manila Rope	231
LIX.	Horse-power of Cotton Rope	232
LX.	Horse-power of Wire Rope	233

PLATES

Plates		Page
C 1.	Toggle Joint Press Assembly	Facing 236
C 2.	Toggle Joint Press Details	Facing 238
C 3.	Toggle Joint Press Details	Facing 240
C 4.	Single Power Punch Assembly	287
C 5.	Single Power Punch Details	288
C 6.	Single Power Punch Details	289
C 7.	Single Power Punch Details	Facing 290
C 8.	Single Power Punch Details	290

MACHINE DESIGN

INTRODUCTION

UNITS AND FORMULAS

1. Units.—In this book the following units will be used unless otherwise stated.

Dimensions in inches.
Forces in pounds.
Stresses in pounds per square inch.
Velocities in feet per second.
Work and energy in foot pounds.
Moments in pounds inches.
Speeds of rotation in revolutions per minute.

The word *stress* will be used to denote the resistance of material to distortion per unit of sectional area. The word *deformation* will be used to denote the distortion of a piece per unit of length. The word *set* will be used to denote total permanent distortion.

In making calculations the use of the slide-rule and of four-place logarithms is recommended; accuracy is expected only to three significant figures.

2. Abbreviations.—The following abbreviations are among those recommended by a committee of the American Society of Mechanical Engineers in December, 1904, and will be used throughout the book.[1]

NAME	ABBREVIATION
Inches	in.
Feet	ft.
Yards	yd.

[1] Tr. A. S. M. E., Vol. XXVI, p. 60.

NAME	ABBREVIATION
Miles	spell out.
Pounds	lb.
Tons	spell out.
Gallons	gal.
Seconds	sec.
Minutes	min.
Hours	hr.
Linear	lin.
Square	sq.
Cubic	cu.
Per	spell out.
Fahrenheit	fahr.
Percentage	% or per cent.
Revolutions per minute	r.p.m.
Brake horse power	b.h.p.
Electric horse power	e.h.p.
Indicated horse power	i.h.p.
British thermal units	B.t.u.
Diameter	Diam.

3. Notation.

Arc of contact	$=\theta$ radians.
Area of section	$=A$ sq. in.
Breadth of section	$=b$ in.
Coefficient of friction	$=f$
Deflection of beam	$=\Delta$ in.
Degrees	=deg.
Depth of section	$=h$ in.
Diameter of circular section	$=d$ in.
Distance of neutral axis from outer fiber	$=y$ in.
Elasticity, modulus of,	
in tension and compression	$=E$
in shearing and torsion	$=G$
Heaviness, weight per cu. ft.	$=w$
Length of any member	$=l$ in.
Load or dead weight	$=W$ lb.
Moment, in bending	$=M$ lb.-in.
in twisting	$=T$ lb.-in.

Moment of inertia	
rectangular	$=I$
polar	$=J$
Pitch of teeth, rivets, etc.	$=p$ in.
Radius of gyration	$=r$ in.
Section modulus, bending	$=\frac{I}{y}=Z$
twisting	$=\frac{J}{y}=Z_p$
Stress per unit of area	$=S$
Velocity in feet per second	$=v$ ft. per sec.

4. Formulas.

Simple Stress

Tension, compression or shear, $S=\frac{W}{A}$ (1)

Bending under Transverse Load

General equation, $M=\frac{SI}{y}.$ (2)

Rectangular section, $M=\frac{Sbh^2}{6}.$ (3)

Rectangular section, $bh^2=\frac{6M}{S}.$ (4)

Circular section, $M=\frac{Sd^3}{10.2}.$ (5)

Circular section, $d=\sqrt[3]{\frac{10.2\,M}{S}}.$ (6)

Torsion or Twisting

General equation, $T=\frac{SJ}{y}.$ (7)

Circular section, $T=\frac{Sd^3}{5.1}.$ (8)

Circular section, $d=\sqrt[3]{\frac{5.1\,T}{S}}.$ (9)

Hollow circular section, $T=\frac{S}{5.1}\,\frac{d^4-d_1^4}{d}.$ (10)

Other values of $\frac{I}{y}$ and $\frac{J}{y}$ may be taken from Table II.

Combined Bending and Twisting

Calculate shaft for a bending moment,

$$T^1 = \tfrac{1}{2}(M + \sqrt{M^2 + T^2}). \tag{11}$$

Column subject to Bending

Use Rankine's formula, $\dfrac{W}{A} = \dfrac{S}{1 + q\dfrac{l^2}{r^2}}$. (12)

The values of r^2 may be taken from Table II. The subjoined table gives the average values of q, while S is the compressive strength of the material.

TABLE I

VALUES OF q IN FORMULA 12

Material	Both ends fixed	Fixed and round	Both ends round	Fixed and free
Timber.....	$\frac{1}{3000}$	$\frac{1.78}{3000}$	$\frac{4}{3000}$	$\frac{16}{3000}$
Cast iron.....	$\frac{1}{5000}$	$\frac{1.78}{5000}$	$\frac{4}{5000}$	$\frac{16}{5000}$
Wrought iron....	$\frac{1}{36000}$	$\frac{1.78}{36000}$	$\frac{4}{36000}$	$\frac{16}{36000}$
Steel.....	$\frac{1}{25000}$	$\frac{1.78}{25000}$	$\frac{4}{25000}$	$\frac{16}{25000}$

Carnegie's hand-book gives $S = 50{,}000$ for medium steel columns and $q = \frac{1}{36000}$, $\frac{1}{24000}$ and $\frac{1}{18000}$ for the three first columns in above table.

In this formula, as in all such, the values of the constant should be determined for the material used by direct experiment if possible.

Or use straight line formula, $\dfrac{W}{A} = S - k\dfrac{l}{r}$. (12a)

TABLE Ia

VALUES OF S AND k IN FORMULA (12a)

(Merriman's Mechanics of Materials)

Kind of column	S	k	Limit $\frac{l}{r}$
Wrought Iron:			
Flat ends	42,000	128	218
Hinged ends	42,000	157	178
Round ends	42,000	203	138
Mild Steel:			
Flat ends	52,500	179	195
Hinged ends	52,500	220	159
Round ends	52,500	284	123
Cast Iron:			
Flat ends	80,000	438	122
Hinged ends	80,000	537	99
Round ends	80,000	693	77
Oak:			
Flat ends	5,400	28	128

Carnegie's hand-book gives allowable stress for structural columns of mild steel as 12,000 for lengths less than 90 radii, and as $17{,}100 - 57\frac{l}{r}$ for longer columns.

This allows a factor of safety of about four.

TABLE II

Constants of Cross-section

Form of section and area A	Square of radius of gyration r^2	Moment of inertia $I = Ar^2$	Section modulus $\frac{I}{y}$	Polar moment of inertia J	Torsion modulus $\frac{J}{y}$
Rectangle bh	$\frac{h^2}{12}$	$\frac{bh^3}{12}$	$\frac{bh^2}{6}$	$\frac{bh^3+b^3h}{12}$	$\frac{bh^3+b^3h}{6\sqrt{b^2+h^2}}$
Square d^2	$\frac{d^2}{12}$	$\frac{d^4}{12}$	$\frac{d^3}{6}$	$\frac{d^4}{6}$	$\frac{d^3}{4.24}$
Hollow rectangle or I-beam $bh - b_1h_1$	$\frac{bh^3-b_1h^3_1}{12(bh-b_1h_1)}$	$\frac{bh^3-b_1h^3_1}{12}$	$\frac{bh^3-b^1h^3_1}{6h}$		
Circle $\frac{\pi}{4}d^2_2$	$\frac{d^2}{16}$	$\frac{\pi d^4}{64}$	$\frac{d^3}{10.2}$	$\frac{\pi d^4}{32}$	$\frac{d^3}{5.1}$
Hollow circle $\frac{\pi}{4}(d^2-d^2_1)$	$\frac{d^2+d^2_1}{16}$	$\frac{\pi(d^4-d^4_1)}{64}$	$\frac{d^4-d^4_1}{10.2d}$	$\frac{\pi(d^4-d^4_1)}{32}$	$\frac{d^4-d^4_1}{5.1d}$
Ellipse $\frac{\pi}{4}ab$	$\frac{a^2}{16}$	$\frac{\pi ba^3}{64}$	$\frac{ba^2}{10.2}$	$\frac{\pi(ba^3+ab^3)}{64}$	$\frac{ba^2+ab^2}{10.2a}$

Values of I and J for more complicated sections can be worked out from those in table.

TABLE III

FORMULAS FOR LOADED BEAMS

Beams of uniform cross-section	Maximum moment M	Maximum deflection Δ
Cantilever, load at end	Wl	$\frac{Wl^3}{3EI}$
Cantilever, uniform load	$\frac{Wl}{2}$	$\frac{Wl^3}{8EI}$
Simple beam, load at middle	$\frac{Wl}{4}$	$\frac{Wl^3}{48EI}$
Simple beam, uniform load	$\frac{Wl}{8}$	$\frac{5Wl^3}{384EI}$
Beam fixed at one end, supported at other, load at middle.	$\frac{3Wl}{16}$	$\frac{.0182Wl^3}{EI}$
Beam fixed at one end, suppported at other, uniform load.	$\frac{Wl}{8}$	$\frac{.0054Wl^3}{EI}$
Beam fixed at both ends, load at middle	$\frac{Wl}{8}$	$\frac{Wl^3}{192EI}$
Beam fixed at both ends, uniform load	$\frac{Wl}{12}$	$\frac{Wl^3}{384EI}$
Beam fixed at both ends, load at one end, (pulley arm).	$\frac{Wl}{2}$	$\frac{Wl^3}{12EI}$

5. Profiles of Uniform Strength.—In a bracket or beam of uniform cross-section the stress on the outer row of fibers increases as the bending moment increases and the piece is most liable to break at the point where the moment is a maximum. This difficulty can be remedied by varying the cross-section in such a way as to keep the fiber stress constant along the top or bottom of the piece. The following table shows the shapes to be used under different conditions.

Type	Load	Plan	Elevation
Cantilever.....	Center....	Rectangle...	Parabola, axis horizontal.
Cantilever.....	Uniform..	Rectangle...	Triangle.
Simp. Beam.....	Center....	Rectangle...	Two parabolas intersecting under load.
Simp. beam.....	Uniform..	Rectangle...	Ellipse, major axis horizontal.

The material is best economized by maintaining a constant breadth and varying the depth as indicated.

This method of design is applicable to cast pieces rather than to those that are forged or cut.

The maximum deflection of cantilevers and beams having a profile of uniform strength is greater than when the cross-section is uniform, 50 per cent greater if the breadth varies, and 100 per cent greater if the depth varies.

CHAPTER I

MATERIALS

6. Primary Classification.—The materials used in machine construction are practically all metals. They may be classified in two ways: (*a*) According to the principal metallic constituents such as iron, copper, tin, etc.; (*b*) as cast or wrought metals according to the methods employed in preparing them for use.

The following table combines the two methods of classification.

TABLE IV

Principal metal	Cast	Wrought
Iron	Cast iron	Wrought iron.
	Malleable iron	Soft steel.
	Steel castings	Tool steel.
		Alloy steel.
Copper	Bronze	Brass wire.
	Brass	Sheet brass.
Tin	Babbitt metal	
Aluminum	Bronze	Rolled or drawn.

7. Iron.—Commercial iron is produced from iron ore by reduction in a blast furnace. Most iron ores are oxides and also contain earthy impurities such as silica and alumina.

The oxygen is removed by the burning of the coke used as fuel, while the limestone used as a flux unites with the silica and alumina forming a glassy slag which floats on the molten iron.

Pig Iron.—The coarse-grained impure iron thus formed is the pig iron of commerce and from it is made ordinary cast iron by remelting in the cupola of the foundry. Pig iron contains besides iron various quantities of carbon, silicon, manganese, phosphorus and sulphur. The last two are impurities and if

present in any considerable quantity render the pig unsuitable for the manufacture of high-grade irons or steels. The phosphorus comes from the ore and the sulphur from the fuel used. The use of high-grade ore and of coke made from a non-sulphur coal is necessary to the production of pure iron. Pig iron may be used in the foundry for the manufacture of iron castings, in the puddling mill for producing wrought iron, or in the steel mill for the manufacture of Bessemer or of open-hearth steel.

Cast Iron.—Iron castings are made in the foundry by melting pig iron in a cupola using coke for a fuel. The quality of the cast iron depends largely upon the character of the pig iron used, as there is little chemical change affected in the cupola. A certain amount of scrap cast iron may be melted with the charge; remelting of iron makes it finer grained and harder. Wrought iron or steel shavings mixed with the molten cast iron produces a tough fine-grained iron, sometimes called semi-steel. The addition of about 25 per cent of steel scrap makes a fine-grained soft iron having a tensile strength about 50 per cent greater than that of the cast iron without the steel.

Carbon exists in cast iron in two forms: (*a*) chemically combined with the iron; (*b*) as free carbon or graphite. The larger the proportion of free carbon, the softer and weaker is the iron. Remelting and cooling increases the amount of combined carbon and makes the iron harder as before noticed. The total amount of carbon present varies from 2 to 5 per cent in different irons.

Silicon is an important element in iron and influences the rate of cooling. The more slowly iron cools after melting, the more graphite forms, the less the shrinkage and the softer the iron. Two per cent of silicon gives a soft gray iron with a high tensile strength. Machinery iron contains usually from 1½ to 2 per cent of silicon.

Chilled iron is cast iron which has been cooled suddenly in the mold by contact with metal or some other good conductor of heat. Chilling increases the amount of combined carbon and makes the iron white and hard. It is used on surfaces which need to be extremely hard and durable, as the treads of car wheels and the outside of the rolls used on steel mills. The depth of the chill depends on the amount of metal used in the cooling surface of the mold.

All castings are chilled slightly on the surface. An examination of a freshly fractured casting shows whiter and finer-grained metal around the edges than at the center. For this reason, castings having considerable surface or "skin" in proportion to their weight are relatively stronger (see Art. 15).

In selecting cast iron for various machine members, soft gray irons should be chosen where workability rather than strength is desired. Medium gray irons having a fine grain should be used where moderate strength and hardness are necessary as in the cylinders of steam engines and pumps. Hard gray iron is only suitable for heavy castings which require little or no machining, as it is brittle and not easily worked. An examination of the fracture of a sample of iron is a guide in determining its desirability for any particular case.

Cast iron is the cheapest and best material for pieces of irregular and complicated shape; it has a high compressive and a low tensile strength; it is brittle and cannot be welded or forged; but it resists corrosion much better than wrought iron. For its use in machine construction, see Art. 14.

Malleable Iron.—Malleable iron is cast iron annealed and partially decarbonized by being heated in an annealing oven in contact with some oxidizing material such as hematite ore, and then being allowed to cool slowly. A white cast iron is best for this process as the presence of graphitic carbon interferes with its success. An iron containing a small amount of silicon and considerable manganese promotes the formation of combined carbon just as silicon promotes the formation of free carbon.

The castings before being annealed are hard and brittle, the fracture showing a silvery appearance. They are packed in air-tight cast-iron boxes with the oxidizing material and are kept at a red heat for several days. They are allowed to cool slowly and when removed are tough and ductile with a dull gray fracture.

The oxidation removes some of the total carbon from the surface of the material and the heating and slow cooling changes the most of that remaining to graphite.

An iron which originally contains 2.8 per cent combined and 0.20 per cent free carbon, after annealing may show 0.20 per cent combined and 1.8 per cent free carbon.

Malleable castings are particularly suitable for small parts having irregular shapes. The metal does not possess as much ductility or tensile strength as wrought iron but occupies a place intermediate between that and cast iron.

As the process of malleablizing is to a certain extent a superficial one, it is best adapted to thin metal, although castings an inch or more in thickness have been successfully treated.

Wrought Iron.—Wrought iron is commercially pure iron which is made from pig iron by decarbonizing it in the puddling furnace. This furnace is a reverberatory one in which the molten pig is subjected to the action of the hot gases from the fuel.

The silicon, manganese and carbon are oxidized or burned out, either by the action of the gas or by oxide of iron introduced with the charge. A part of the phosphorus and sulphur is also oxidized in the puddling. The molten mass is continually stirred during the process and finally assumes a pasty consistency. It is then squeezed to remove the slag and rolled into bars. These are cut, piled and welded into either bar or plate iron.

The particles of iron in the puddling process are more or less enveloped in the slag and as the mass is squeezed and rolled, these particles become fibers separated from each other by a thin sheath or covering of slag, and it is this which gives wrought iron its characteristic structure.

The presence of either sulphur or phosphorus in the iron renders it less reliable.

Wrought iron possesses moderate tensile strength and high ductility. It can be forged and welded readily. Hammering or rolling it cold increases its strength and stiffness to a certain degree and raises artificially its elastic limit. For most purposes, it has been replaced of late years by soft steel. Either of these metals may be rendered superficially hard by the process known as *case hardening.* The pieces to be treated are packed in air-tight boxes together with pulverized carbon in some form, usually bone-black. The boxes are brought to a red heat and kept so for several hours. The pieces are then removed and quenched suddenly in water. The surface of the iron has combined with the carbon in which it was packed and changed to a high-carbon or hardening steel. Such pieces have a soft, ductile

center and a hard surface. Case hardening can be done after finishing but is liable to warp the metal.

8. Steel.—Steel is made from molten pig iron by burning out the silicon and carbon with a hot blast, either passing through the liquid as in the Bessemer converter, or over its surface as in the open-hearth furnace. A suitable quantity of carbon and manganese is then added and the metal poured into ingot molds. If the ingots are reheated and rolled, structural steel and rods or rails are the result.

Manganese has the effect of preventing blow holes and giving the steel a more uniform texture.

Open-hearth steel differs but little from Bessemer in its chemical composition but is more uniform in quality on account of the more deliberate nature of the process of manufacture. Boiler plate, structural steel, and in general material which is responsible for the safety of life and limb should be of open-hearth rather than Bessemer steel.

Steel containing not more than 0.6 per cent of carbon is known as soft steel. It has a higher elastic limit and greater tensile strength than wrought iron, which metal it has practically supplanted in the manufacture of machine parts. It is very ductile and malleable and may be welded if not too high in carbon.

Crucible steel is made by melting steel or a mixture of iron and carbon in a crucible and pouring the melted metal into molds, and hence is commonly known as cast steel.

This method is used for producing the harder steels suitable for cutting tools. The amount of carbon will vary from 0.5 to 1.5 per cent according to the use to be made of the steel. Such steel contains small amounts of silicon and manganese but must be practically free from sulphur and phosphorus.

It is relatively high priced and is not used for ordinary machine parts. It cannot be readily welded but possesses the very useful characteristic of hardening when heated to a red heat and cooled suddenly. The degree of hardness can be controlled by accurately measuring the temperature of heating and by using various cooling agents such as water, brine and different kinds of oil. The steel can be tempered or softened after hardening by reheating to a slight degree.

In machine construction crucible steel is only used for screws, spindles, ratchets, etc., which need to be extremely hard. It has a high tensile and compressive strength but is brittle and liable to contain hardening cracks.

Steel castings are made by pouring fluid open-hearth steel directly into molds. They possess somewhat the same characteristics as malleable castings, being relatively tough and ductile.

It has been somewhat difficult in the past to obtain reliable castings of this material as the great shrinkage—about double that of cast iron—has tended to make them porous and spongy in spots.

Furthermore, steel which was sufficiently low in carbon to make soft castings was not fluid enough to run sharply in the mold.

These difficulties have been to a large extent overcome and it is now possible to obtain steel castings which are reasonably clean and sound. They have about the same chemical composition as mild rolled steel, the carbon varying from 0.2 to 0.6 per cent, the silicon about the same and manganese from 0.5 to 1 per cent. Steel castings when first poured are coarse-grained and should be annealed to make them tough and ductile.

9. Steel Alloys.—Steel alloys are compounds of steel with chromium, vanadium, manganese, etc.; strictly speaking, all steels are alloys of iron with other substances, but when the term steel is used without qualification, it is understood to mean carbon steel.

Nickel steel is both stronger and tougher than carbon steel. A high carbon steel is strong but brittle; the same or greater strength can be obtained by the addition of nickel without materially diminishing the ductility. This metal is suitable for pieces which are subject to severe shocks.

Manganese steel is an alloy containing about 1 per cent of carbon and from 10 to 20 per cent of manganese; 14 per cent of manganese gives the maximum of strength and ductility combined. This metal is strong, tough and extremely hard, so that it cannot be readily finished except by grinding. It can be used for cutting tools, and like nickel steel is valuable for pieces

subjected to great stress and wear. Its strength is increased by heating and sudden cooling.

Chromium is sometimes added to nickel steel in the manufacture of safes and armor plate.

Mushet steel is an alloy of high carbon steel with tungsten and manganese and was the first of the air-hardening steels used for cutting tools. Like all of this class of tool steels, it must be worked at a yellow heat and hardens when cooled slowly in the air.

The so-called air-hardening or high-speed steels are of various chemical compositions, containing carbon, manganese, tungsten, chromium, molybdenum or titanium, but the exact ingredients and proportions are for the most part trade secrets. Such steels are usually purchased in small sections and are used in special tool holders. They are forged with great difficulty and are generally heated in special furnaces with pyrometers for determining the exact temperature, and cooled in an air blast or by dipping in oil baths. The difference of a few degrees in the temperature of the metal will make or mar the cutting efficiency. They are of no use in machine construction, but affect it indirectly by requiring much greater strength, rigidity and power in machine tools.

It is not an uncommon thing for the power consumption of a lathe or planer to be increased six or eight times by the use of the newer tools.

Vanadium steel is one of the latest claimants for favor among the steel alloys. The addition of a small amount of this metal, 0.1 or 0.2 per cent, increases the strength and stiffness of mild steel in a marked degree with comparatively little increase in its cost.

It is already used extensively in machine construction, particularly in marine work.

10. Copper Alloys.—These metals are alloys of copper and tin, copper and zinc or of all three. Copper is not used alone in machine construction except for electric conductors. Phosphorus, aluminum and manganese are also used in combination with copper.

The copper-tin alloys are commonly known as *bronzes* and are

expensive on account of the large proportion of copper, from 85 to 90 per cent.

Copper-zinc alloys, on the other hand, are called *brass*, and for maximum strength and ductility should contain from 60 to 70 per cent of copper.

Bronzes high in tin and low in copper are weak, but have considerable ductility and make good metals for bearings. Tin 80, copper 10 and antimony 10 is Babbitt metal, so much used to line journal bearings, the antimony increasing the hardness.

The late Dr. Thurston's experiments on the copper-tin-zinc alloys showed a maximum strength for copper 55, zinc 43 and tin 2 per cent. The tensile strength of this mixture was nearly 70,000 lb. per square inch.

Phosphor bronze is a copper alloy with a small amount of phosphorus added to prevent oxidation of the copper and thereby strengthen the alloy.

Manganese bronze is an alloy of copper and manganese, usually containing iron and sometimes tin. A bronze containing about 84 per cent copper, 14 per cent manganese and a little iron, has much the same physical characteristics as soft steel and resists corrosion better.

There is practically no limit to the varieties of color, hardness, ductility and durability among the copper alloys. Some of the more common mixtures are here given.

TABLE V

COMPOSITION OF BRONZES

Name	Composition
Gun metal	Copper .90, tin .10
Bell metal	Copper .77, tin .23
Yellow brass	Copper .65, zinc .35
Muntz metal	Copper .60, zinc .40
Aluminum bronze	Copper .90, aluminum .10
Phosphor bronze	Copper .89, tin .09, phosphorus .01
Manganese bronze (1)	Copper .84, manganese .14, iron .02
Manganese bronze (2)	Copper .675, manganese .18 Zinc .13, aluminum .01, silicon .005

11. Strength and Elasticity.—The constants for strength and elasticity given in the tables are only fair average values and should be determined for any special material by direct experiment when it is practicable. Many of the constants are not given in the table on account of the lack of reliable data for their determination.

The strength of steel, either rolled or cast, depends so much upon the percentages of carbon, phosphorus and manganese, that any general figures are liable to be misleading. Structural steel usually has a tensile strength of about 65,000 lb. per square inch, while boiler plate usually has less carbon, a low tensile strength and good ductility.

Factors of Safety.—A factor of safety is the ratio of the ultimate strength of any member to the ordinary working load which will come upon it. This factor is intended to allow for: (*a*) Overloading either intentional or accidental. (*b*) Sudden blows or shocks. (*c*) Gradual fatigue or deterioration of material. (*d*) Flaws or imperfections in the material.

To a certain extent the term "factor of ignorance" is justifiable since allowance is made for the unknown. Certain fixed laws may guide one, however, in making the selection of a factor. It is a well-known fact that loads in excess of the elastic limit are liable to cause failure in time. Therefore, when the elastic limit of the material can be determined, it should be used as a basis rather than to use the ultimate strength.

Furthermore, suddenly applied loads will cause about double the stress due to dead loads. These considerations indicate four as the least factor that should be used when the ultimate strength is taken as a basis. Pieces subject to stress alternately in opposite directions should have large factors of safety.

The following table shows the factors used in good practice under various conditions:

Structural steel in buildings	4
Structural steel in bridges	5
Steel in machine construction	6
Steel in engine construction	10
Steel plate in boilers	5
Cast iron in machines	6 to 15

Castings of bronze or steel should have larger factors than rolled or forged metal on account of the possibility of flaws.

TABLE VI

Wrought Metals

Kind of Metal.	Wt. of Cu. inch.	Wt. of Cu. Ft.	Ultimate Strength.			Elastic Limit. Tensi'n.	Modulus of Rupture Tr'nsv'rse.	Modulus of Elasticity. Tension.
			Tensi'n.	Compress.	Shear.			
Wrought Iron, small bars.....	.28	485	55000	38000	45000	28000	40000	26000000
Wrought Iron, plates.....	.....	.....	50000	.....	40000	25000	.....	25000000
Wrought Iron, large forgings,.....	.....	.....	45000	.....	35000	22500	30000	25000000
Structural Steel.....	.....	.....	64000	64000	50000	33000	60000	29000000
Steel, flange plate.....	.....	.....	58000	100000	48000	34000	.....	28000000
Steel, marine plate.....	.....	.....	52000	.....	.....	30000	.....	24000000
Soft Steel, 0.15 C.....	.....	.....	65000	.....	50000	35000	.....	28000000
Machinery Steel.....	.....	.....	80000	.....	65000	45000	.....	30000000
Steel, Crucible or Tool.....	.282	487	120000	.....	.....	60000	.....	40000000

Prof. Thurston has given the following formula for the tensile strength of steel when C is the per cent of carbon: $S = 60{,}000 + 70{,}000\ C$.

TABLE VII

CAST METALS

Kind of Metal.	Wt. of Cu. Inch.	Wt. of Cu. Ft.	Ultimate strength.			Elastic Limit. Tensi'n.	Modulus of Rupture Tr'nsv'rse.	Modulus of Elasticity. Tension.
			Tensi'n.	Compress.	Shear.			
Cast Iron	.26	450	18000	75000	25000		36000	18000000
Malleable Castings	.256	442	36000	.....	42000	16000	.....	.....
Steel Castings (small)	.....	.....	38000	125000	.....	18000	.....	30000000
Steel Castings (large)	.....	.....	70000	70000	60000	40000	70000	30000000
Brass castings	.289	500	18000	12000	.....	.....	16000	9000000
Copper Castings	.321	555	24000	75000	24000	.....	30000	15000000
Bronze, Gun Metal	.309	534	36000	100000	.....	.....	.....	10000000
Bronze, 10Al. 90 Cu	.....	.....	85000	132000	.....	.....	.....	.....
Bronze, Manganese	.....	.....	60000	120000	.....	30000	.....	.....
Bronze, Phosphor	.....	.....	58000	.....	43000	20000	.....	14000000
Aluminum Castings	.092	159	28000	13000	.....	14000	.....	11000000
Aluminum Wire	.....	.....	42000	.....	.....	.....	.....	.....

The results in Table VII are mostly calculated from experiments by the author.

Cast iron should not be used in pieces subject to tension or bending if there is a liability of shocks or blows coming on the piece.

NOTE.—In giving references to transactions and periodicals, the following abbreviations will be used:

Transactions of American Society of Mechanical Engineers.	Tr. A. S. M. E.
American Machinist	Am. Mach.
Cassier's Magazine	Cass.
Engineering Magazine	Eng. Mag.
Engineering News	Eng. News
Machinery	Mchy.

REFERENCES

Materials of Machines. A. W. Smith.
Mechanics of Materials. Merriman.
Materials of Engineering. Thurston.

CHAPTER II

FRAME DESIGN

12. General Principles of Design.—The working or moving parts should be designed first and the frame adapted to them.

The moving parts can be first arranged to give the motions and velocities desired, special attention being paid to compactness and to the convenience of the operator.

Novel and complicated mechanisms should be avoided and the more simple and well-tried devices used.

Any device which is new should be first tried in a working model before being introduced in the design.

The dimensions of the working parts for strength and stiffness must next be determined and the design for the frame completed. This may involve some modification of the moving parts.

In designing any part of the machine, the metal must be put in the line of stress and bending avoided as far as possible.

Straight lines should be used for the outlines of pieces exposed to tension or compression, circular cross-sections for all parts in torsion, and profile of uniform fiber stress for pieces subjected to bending action.

Superfluous metal must be avoided and this excludes all ornamentation as such. There should be a good practical reason for every pound of metal in the machine.

An excess of metal is sometimes needed to give inertia and solidity and prevent vibration, as in the frames of machines having reciprocating parts, like engines, planers, slotting machines, etc.

Mr. Oberlin Smith has characterized this as the "anvil" style of design in contradistinction to the "fiddle" style.

In one the designer relies on the mass of the metal, in the other on the distribution of the metal, to resist the applied forces.

A comparison of the massive Tangye bed of some large high-speed engines with the comparatively slight girder frame used in most Corliss engines, will emphasize this difference.

It may be sometimes necessary to waste metal in order to save labor in finishing, and in general the aim should be to economize labor rather than stock.

The designers should be familiar with all the shop processes as well as the principles of strength and stability. The usual tendency in design, especially of cast-iron work, is toward unnecessary weight.

All corners should be rounded for the comfort and convenience of the operator, no cracks or sharp internal angles left where dirt and grease may accumulate, and in general special attention should be paid to so designing the machine that it may be safely and conveniently operated, that it may be easily kept clean, and that oil holes are readily accessible. The appearance of a machine in use is a key to its working condition.

Polished metal should be avoided on account of its tendency to rust, and neither varnish nor bright colors tolerated. The paint should be of some neutral tint and have a dead finish so as not to show scratches or dirt.

Beauty is an element of machine design, but it can only be attained by legitimate means which are appropriate to the material and the surroundings.

Beauty is a natural result of correct mechanical construction but should never be made the object of design.

Harmony of design may be secured by adopting one type of cross-section and adhering to it throughout, never combining cored or box sections with ribbed sections. In cast pieces the thickness of metal should be uniform to avoid cooling strains, and for the same reason sharp corners should be absent. The lines of crystallization in castings are normal to the cooled surface and where two flat pieces come together at right angles, the interference of the two sets of crystals forms a plane of weakness at the corner. This is best obviated by joining the two planes with a bend or sweep.

Rounding the external corner and filleting the internal one is usually sufficient. Where two parts come together in such a way as to cause an increase of thickness of the metal there are apt to be "blow holes" or "hot spots" at the junction due to the uneven cooling.

"Strengthening" flanges when of improper proportions or in

the wrong location are frequently a source of weakness rather than strength. A cast rib or flange on the tension side of a plate exposed to bending, will sometimes cause rupture by crack-

FIG. 1.—OLD PLANING MACHINE. AN EXAMPLE OF ELABORATE ORNAMENTATION.

ing on the outer edge. When a crack is once started rupture follows almost immediately. When apertures are cut in a

frame either for core-prints or for lightness, the hole or aperture hsould be the symmetrical figure, and not the metal that surrounds it, to make the design pleasing to the eye.

The design should be in harmony with the material used and not imitation. For example, to imitate structural work either of wood or iron in a cast-iron frame is silly and meaningless.

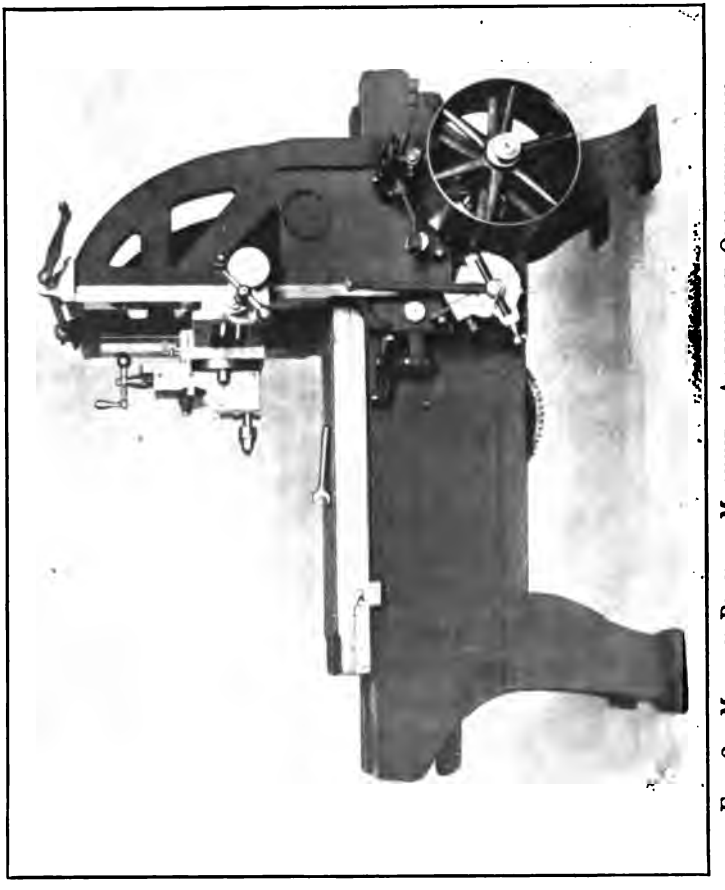

FIG. 2.—MODERN PLANING MACHINE. ABSENCE OF ORNAMENTATION.

Machine design has been a process of evolution. The earlier types of machines were built before the general introduction of cast-iron frames and had frames made of wood or stone, paneled, carved and decorated as in cabinet or architectural designs.

When cast-iron frames and supports were first introduced they were made to imitate wood and stone construction, so that in the earlier forms we find panels, moldings, gothic traceries and elaborate decorations of vines, fruit and flowers, the whole covered with contrasting colors of paint and varnished as carefully as a piece of furniture for the drawing-room. Relics of this transition period in machine architecture may be seen in almost every shop. One man has gone down to posterity as actually advertising an upright drill designed in pure Tuscan.

13. Machine Supports.—The fewer the number of supports the better. Heavy frames, as of large engines, lathes, planers, etc., are best made so as to rest directly on a masonry foundation. Short frames as those of shapers, screw machines and milling machines, should have one support of the cabinet form. The use of a cabinet at one end and legs at the other is offensive to the eye, being inharmonious. If two cabinets are used provision should be made for a cradle or pivot at one end to prevent twisting of the frame by an uneven foundation. The use of intermediate supports is always to be condemned, as it tends to make the frame conform to the inequalities of the floor or foundation on what has been aptly termed the "caterpillar principle."

A distinction must be made between cabinets or supports which are broad at the base and intended to be fastened to the foundation, and legs similar to those of a table or chair. The latter are intended to simply rest on the floor, should be firmly fastened to the machine and should be larger at the upper end where the greatest bending moment will come.

The use of legs instead of cabinets is an assumption that the frame is stiff enough to withstand all stresses that come upon it, unaided by the foundation, and if that is the case intermediate supports are unnecessary.

Whether legs or cabinets are best adapted to a certain machine the designer must determine for himself.

Where two supports or pairs of legs are necessary under a frame, it is best to have them set a certain distance from the ends, and make the overhanging part of the frame of a parabolic form, as this divides up the bending moment and allows less deflection at the center. Trussing a long cast-iron frame with

iron or steel rods is objectionable on account of the difference in expansion of the two metals and the liability of the tension nuts being tampered with by workmen.

The sprawling double curved leg which originated in the time of Louis XIV and which has served in turn for chairs, pianos, stoves and finally for engine lathes is wrong both from a practical and esthetic standpoint. It is incorrect in principle and is therefore ugly.

EXERCISE

1. Apply the foregoing principles in making a written criticism of some engine or machine frame and its supports.
   (a) Girder frame of engine.
   (b) Tangye bed of air compressor.
   (c) Bed, uprights and supports of iron planing machine.
   (d) Bed and supports of engine lathe.
   (e) Cabinet of shaping or milling machine.
   (f) Frame of upright drill.

14. Machine Frames.—Cast iron is the material most used but steel castings are now becoming common in situations where the stresses are unusually great, as in the frames of presses, shears and rolls for shaping steel.

Cored vs. Rib Sections.—Formerly the flanged or rib section was used almost exclusively, as but a few castings were made from each pattern and the cost of the latter was a considerable item. Of late years the use of hollow sections has become more common; the patterns are more durable and more easily molded than those having many projections and the frames when finished are more pleasing in appearance.

The first cost of a pattern for hollow work, including the cost of the core-box, is sometimes considerably more but the pattern is less likely to change its shape and in these days of many castings from one pattern, this latter point is of more importance. Finally, it may be said that hollow sections are usually stronger for the same weight of metal than any that can be shaped from webs and flanges.

Resistance to Bending.—Most machine frames are exposed to bending in one or two directions. If the section is to be ribbed it should be of the form shown in Fig. 3. The metal being of

nearly uniform thickness and the flange which is in tension having an area three or four times that of the compression flange. In a steel casting these may be more nearly equal. The hollow section may be of the shape shown in Fig. 4, a hollow rectangle with the tension side re-enforced and slightly thicker than the other three sides. The re-enforcing flanges at *A* and *B* may often be utilized for the attaching of other members to the frame as in shapers or drill presses. The box section has one great advantage over the I section in that its moment of resistance to side bending

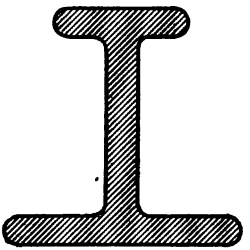

FIG. 3.

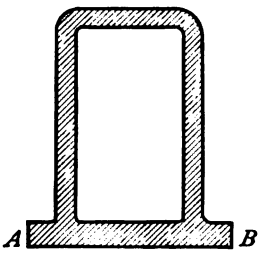

FIG. 4.

or to twisting is usually much greater. The double I or the U section is common where it is necessary to have two parallel ways for sliding pieces as in lathes and planers. As is shown in Fig. 5 the two I's are usually connected at intervals by cross girts.

Besides making the cross-section of the most economical form, it is often desirable to have such a longitudinal profile as shall give a uniform fiber stress from end to end. This necessitates a parabolic or elliptic outline of which the best instance is the housing or upright of a modern iron planer.

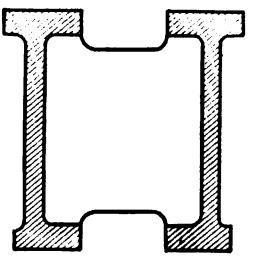

FIG. 5.

Resistance to Twisting.—The hollow circular section is the ideal form for all frames or machine members which are subjected to torsion. If subjected also to bending the section may be made elliptical or, as is more common, thickened on two sides by making the core oval. See Fig. 6. As has already been pointed out the box sections are in general better adapted to resist twisting than the ribbed or I sections.

Frames of Machine Tools.—The beds of lathes are subjected to bending on account of their own weight and that of the saddle and on account of the downward pressure on the tool when work is being turned. They are usually subjected to torsion on account of the uneven pressure of the supports. The box section is then the best; the double I commonly used is very weak against twisting. The same principle would apply in designing the beds of planers but the usual method of driving the table by means of a gear and rack prevents the use of the box section. The uprights of planers and the cross rail are subjected to severe bending moments and should have profiles of uniform strength. The uprights are also subject to side bending when the tool is taking a heavy side cut near the top. To provide for this the uprights may be of a box section or may be reinforced by outside ribs.

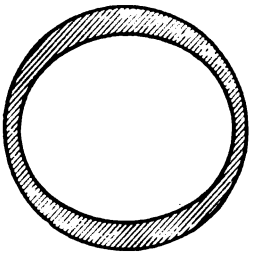

Fig. 6.

The upright of a drill press or vertical shaper is exposed to a constant bending moment equal to the upward pressure on the cutter multiplied by the distance from center of cutter to center of upright. It should then be of constant cross-section from the bottom to the top of the straight part. The curved or goose-necked portion should then taper gradually.

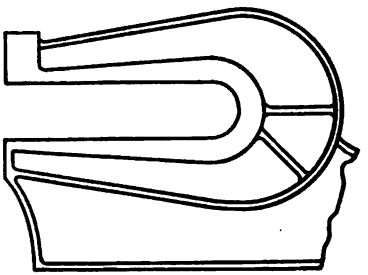

Fig. 7.

The frame of a shear press or punch is usually of the G shape in profile with the inner fibers in tension and the outer in compression. The cross-section should be as in Fig. 3 or Fig. 4, preferably the latter, and should be graduated to the magnitude of the bending moment at each point. (See Fig. 7.)

15. Tests on Simple Beams.—In 1902, a series of experiments was made on cast-iron beams of various sections at the Case School of Applied Science. The work was done by Messrs.

A. F. Kwis and R. H. West[1] under the direction of the author and the results were reported by him in 1906.

The patterns were all 20 in. long and had the same cross-section of 4.15 sq. in. As may be seen from the tables, the areas of the cast beams varied slightly. The castings of each set were all made from the same ladle of iron and were cast on end. A soft gray iron was used and a large flush basin distributed the molten metal to the mold, giving a uniform temperature and quality. The castings were prepared by Mr. Thomas D. West and proved to be remarkably uniform in quality and free from imperfections.

The specimens were all tested by loading transversely at the center, the supports being 18 in. apart.

Object.—The investigation had two distinct objects in view and two classes of test pieces were used. The first class comprised Nos. 1 to 11 and Nos. 22 to 32, and these specimens had sections such as are used in parts of machines.

The second class comprised Nos. 12 to 21 and 33 to 42, all having sections similar to those used in the rims of fly-wheels. The sections tested were such as shown by the diagrams in the tables.

The areas given in the table are those of the specimens at the point of rupture. There are two specimens of each shape cast from the same pattern.

The section modulus $\frac{I}{y}$ was calculated from the dimensions of the casting at the breaking point, y being the distance from neutral axis to extreme fiber in tension. In testing each specimen the load was applied gradually and readings of the deflection were taken at regular intervals. When the "set" load was reached, the pressure was removed and a reading of the permanent set was taken. The load was again applied and observations made on the deflection up to near the time of rupture.

The load-deflection curves plotted from these observations are nearly all smooth and uniform in character, as may be seen by reference to Fig. 8 which shows the curves for No. 33.

The initial line curves gradually from the start showing an imperfect elasticity, while the set line is nearly straight and approximately parallel to the tangent of the curve at the vertex.

[1] *Mchy.*, May, 1906.

TABLE VIII

No.	Section		Section modulus $\left(=\frac{I}{y}\right)$	Loads in pounds			Set in inches	Modulus of rupture	Modulus of elasticity
	Shape	Area		Breaking	When $\Delta = .03$	Set load			
1		4.40	1.304	7,500	2,500	5,000	.018	25,900	8,280,000
22		4.45	1.324	7,250	2,600	5,000	.020	24,640	8,290,000
2		4.46	1.565	8,100	2,600	5,000	.016	23,300	8,650,000
23		4.41	1.543	8,150	3,700	5,000	.005	23,600	9,850,000
3		4.50	3.05	15,200	7,500	15,000	.0225	22,300	6,690,000
24		4.67	3.19	17,100	8,000	15,000	.0195	24,120	6,530,000
4		4.43	2.878	16,900	7,000	15,000	.020	26,450	6,660,000
25		4.37	2.880	22,900	7,500	15,000	.018	35,800	7,440,000
5		4.20	3.27	20,100	7,500	15,000	.0205	27,700	5,360,000
26		4.52	3.494	22,700	7,000	15,000	.019	29,200	5,860,000
6		4.36	3.175	25,400	6,500	20,000	.040	36,000	6,490,000
27		4.47	3.27	25,100	.....	.....	.....	34,600	.....

The so-called moduli of elasticity were calculated from the set lines using the formula

$$E=\frac{Wl^3}{48\,\Delta I}$$

In each test a reading of the load was taken at the instant when the deflection measured 0.03 in., and these loads may be taken as a fair measure of the "stiffness" of the section.

The modulus of rupture was calculated from the breaking load and the section modulus, using the formula:

$$S=\frac{My}{I}=\frac{Wly}{4I}$$

The modulus of rupture, as S is generally called, is supposed to represent the tensile stress on the outer fibers at the point of rupture and to measure in a way the transverse strength of the material. In the absence of a better measure we will use this, and take the circular and square sections as our standards. The average value of S for the four is 24,360 lb. per square inch.

This is a low value even for soft gray iron. The remarkable fluctuations in the value of S for specimens of different cross-section, from a minimum of 18,700 to a maximum of 36,000, show that the ordinary method of calculation would not be of much value in predicting the breaking load of such beams.

Comparison of Strength.—An investigation of the values in Table VIII shows that the hollow circular and elliptic sections are much stronger than the solid sections, the increase in strength being greater than that of the section modulus. The average value of S for the last six numbers in Table VIII is 31,600 as against 24,000 for the six solid sections, an apparent increase in the strength of the material itself of over 25 per cent. This is partly due to the thinner metal, the greater surface of hard "skin" and the freedom from shrinkage strains.

The absence of corners and the consequent uniformity of metal make this an ideal form of section.

The hollow rectangles and the I-sections given in Table IX have an average value of $S=22{,}450$.

No. 8 is lower than the average and Nos. 28 and 32 considerably higher. These discrepancies are due to some accidental condi-

TABLE IX

No.	Section		Section modulus $=\frac{I}{y}$	Loads in pounds			Set in inches	Modulus of rupture	Modulus of elasticity
	Shape	Area		Breaking	When $\Delta = .03$	Set			
7		4.36	5.08	24,250	9,000	20,000	.020	21,500	3,290,000
28		4.40	5.14	32,100	12,000	20,000	.011	28,180	5,530,000
8		4.25	5.94	22,250	8,000	20,000	.018	17,700	3,750,000
29		4.88	5.61	26,250	12,500	20,000	.010	21,100	5,340,000
9		4.87	6.36	29,950	11,000	20,000	.015	21,220	5,760,000
30		4.81	6.56	33,150	13,000	20,000	.012	22,800	5,480,000
10		4.70	6.49	32,400	12,000	20,000	.013	22,500	5,380,000
31		4.53	6.56	31,100	9,000	20,000	.015	21,380	4,040,000
11		4.63	6.42	31,200	9,500	20,000	.019	21,900	4,630,000
32		5.12	6.53	38,050	13,300	20,000	.007	26,220	5,050,000

TABLE X

No.	Section		Section modulus $=\frac{I}{y}$	Loads in pounds			Set in inches	Modulus of rupture	Modulus of elasticity
	Shape	Area		Breaking	When $\Delta = .03$	Set			
12		4.51	.81	5,400	2,100	4,000	.012	30,000	10,740,000
33		5.10	1.99	8,350	2,400	6,000	.024	18,900	8,570,000
13		4.48	.799	5,200	2,000	4,000	.013	29,300	8,430,000
34		4.67	1.68	7,000	2,000	6,000	.041	18,700	8,610,000
14		4.61	.692	4,700	1,750	4,000	.017	30,580	10,170,000
35		4.80	1.61	8,800	2,400	6,000	.024	24,600	11,060,000
15		4.48	.731	4,200	2,000	4,000	.002	25,850	10,250,000
36		5.38	1.74	9,450	2,500	5,000	.016	24,750	10,550,000
16		4.23	.802	4,300	2,500	4,000	.017	24,100	9,350,000
37		4.82	1.795	9,500	3,000	8,000	.040	23,800	10,740,000

tion of the metal, since the mates of these pieces had about the average strength.

The relatively low values of S for this series are probably due to cooling strains in the metal. The table shows quite conclusively that the increase in strength in such sections is not proportional to the increase in the section modulus.

Elasticity.—The values for the modulus of elasticity in Tables VIII and IX seem almost ridiculous, if we are to regard this much abused "constant" as any criterion of the stiffness of a beam.

According to the results of tensile and transverse tests on cast iron E is a variable, being greatest for small loads and diminishing as we approach the breaking load.

Prof. Lanza gives values varying from nine to eighteen millions for a test on one bar. As has been explained, the values of E were determined from the set lines which were approximately straight and not subject to the variation above mentioned. Examining the tables we find the values of E ranging all the way from 11,000,000 down to 3,290,000.

The larger values go with the smaller depths as in Nos. 17 and 38 and the smaller values are found in the sections having the largest section moduli as in Nos. 7 to 11.

This goes to show that the common formula for E does not apply well in the case of cast-iron sections and that the deflection of hollow and I-shaped sections is much greater than would be given by the formula. The columns giving the loads for a deflection of 0.03 in. illustrate this. For instance, the values of I for Nos. 1 and 32 are 1.545 and 12.67 respectively, having a ratio of 8.2.

The loads required to produce the same deflection of 0.03 in. are 2500 lb. and 13,300 lb. respectively, having a ratio of only 5.3.

Rim Sections.—The object of the experiments summarized in Tables X and XI was to determine the effect of flanges on the strength and stiffness of sections such as are used for the rims of fly-wheels.

In order to illustrate this more clearly each alternate section was turned over so as to bring the flanges on the tension side, as may be seen by the shapes in the second columns of the tables.

TABLE XI

No.	Section		Section modulus $=\frac{I}{y}$	Loads in pounds			Set in inches	Modulus of rupture	Modulus of elasticity
	Shape	Area		Breaking	When $\Delta = .03$	Set			
17		4.45	1.404	7,650	3,500	5,000	.011	24,500	10,220,000
38		5.20	2.14	10,900	4,250	6,000	.009	22,950	11,070,000
18		4.25	.914	5,250	3,000	5,000	.018	25,900	9,060,000
39		4.60	2.88	12,000	3,750	8,000	.022	18,700	10,750,000
19		4.41	.835	4,400	7,250	.....	.....	23,700	.....
40		4.60	2.30	12,250	3,750	10,000	.037	24,000	9,340,000
20		4.47	1.774	7,900	5,500	6,000	.007	20,050	7,100,000
41		5.02	4.36	22,600	8,000	20,000	.034	23,250	7,880,000
21		4.50	1.784	10,200	7,250	10,000	.011	25,800	6,230,000
42		5.18	5.95	25,000	9,250	20,000	.020	18,900	7,280,000

The section modulus and the fiber stress were always calculated from the tension side.

In nearly every instance the calculated value of S is higher for the beam having the web in compression and the flanges in tension, or in other words there is not so much disadvantage in this latter arrangement as theory would indicate.

For instance, the section modulus for No. 34 is more than twice that of No. 13 of similar shape and area, but the breaking load is only one-third greater. If we knew where the neutral axes of these sections really were during the process of bending we might perhaps explain this discrepancy.

Depth of Flanges.—Another object of these experiments on wheel rim sections was to determine the relative value of shallow and deep flanges. The average value of the breaking load for the ten sections with shallow flanges in Table X is 6690 lb., and the average value of S about 25,000 lb. per square inch. The corresponding values for the ten sections with deeper flanges in Table XI are 11,800 and 22,800. There is thus a slight falling off in the value of S for the deeper sections but not so much as was noticed in the two other tables.

The elasticity of these sections is more uniform than in those previously noticed, E varying from six to eleven millions. We notice, however, the same peculiarity as before, that the deeper sections are not so stiff in proportion to the values of I as those having shallow flanges.

The conclusions to be derived from these experiments can be stated in a few words:

(1) The commonly accepted formulas for the strength and stiffness of beams do not apply well to cored and ribbed sections of cast iron.

(2) Neither the strength nor the stiffness of a section increases in proportion to the increase in the section modulus or the moment of inertia.

(3) The best way to determine these qualities for a cast-iron beam is by experiment with the particular section desired and not by reasoning from any other section.

The experiments described in this article were made with unusual care on a remarkably clean and homogeneous iron and the regularity of the load curves shows accurate measurement.

That the calculated stresses and moduli show so wide a divergence must be attributed to the formulas rather than the work

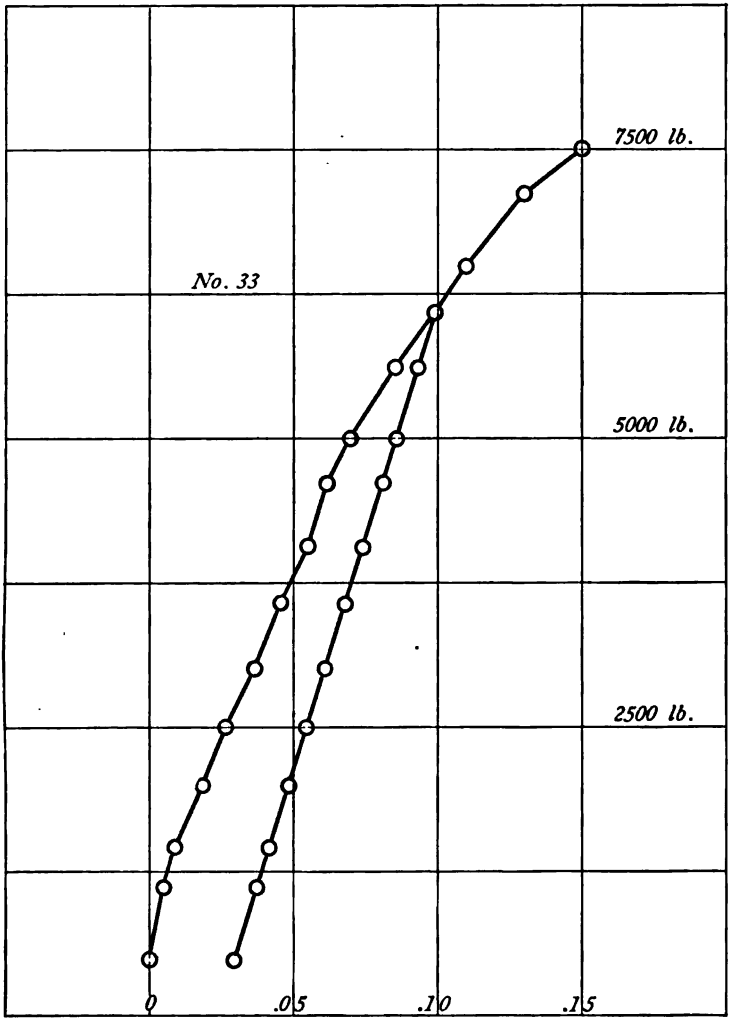

FIG. 8.—LOAD DEFLECTION CURVES FOR SAMPLE NO. 33.

A set of preliminary experiments made on similar sections in 1901 gave results almost identical with those described, the values of S ranging from 22,000 to 35,000 and those of E from five to nine

millions for a rather hard gray iron. The hollow circular sections made the best showing and the thin, deep I-sections the poorest.

16. Shapes of Frames.—The contours or outlines of machine frames vary with the work to be done and the degree of accessibility desired. They may be roughly classified as follows:

(*a*) H or parallel type, with symmetrical loading and direct tension or compression in parallel members.

(*b*) A or triangular type, with direct tension or compression in inclined members and also in cross girt.

(*c*) E or eccentric type with combined tension and bending in long member, bending and shear in two parallel members. Similar to the column with eccentric loading.

(*d*) C type similar to (*c*), a semi-circular member being substituted for the long straight member. Variable tension and bending combined with shear throughout curved part.

(*e*) C or open circular type with variable, combined stresses as in circular part of (*d*).

(*f*) O or closed circular type with combined stresses varying throughout.

Numerous combinations of these various elements can be designed but the principles will remain the same. Table XII is convenient for reference.

TABLE XII

Type	Stresses in members		Illustration
	Vertical	Horizontal	
(*a*) H ..	Tension, or compression.	Negligible.....	Hydraulic press, slotting machine.
(*b*) A ...	Tension, or compression.	Compression, or tension.	Engine frames.
(*c*) E ...	Tension and Bending.	Bending and shear...	Side-crank engine, drill press.
(*d*) C ...	Variable..... Combined.....	Bending and shear...	Punch or shear frame.
(*e*) C ...	Variable..... Combined.....	Variable..... Combined.....	Crane hook. C-clamp.
(*f*) O ...	Variable..... Combined.....	Variable..... Combined.....	Chain link.

NOTE.—The load is assumed to be vertical in each case.

17. Stresses in Frames.—The design of frames of the first two types in Table XII involves no serious difficulty as the stresses are comparatively simple. The ratio $\frac{l}{r}$ is usually too small to permit of buckling in the straight members. As in all cast-iron work, care must be taken in proportioning ribs and fillets to avoid serious cooling strains and allowance must be made for the inferior strength of large castings as compared with small.

When we consider types (*c*), (*d*) and (*e*) where the loading is eccentric and the stresses are composite, the problem is much less easy of solution.

Cast iron is the material most used for machine frames and cast iron is not perfectly elastic. The stress-strain diagram is not straight but parabolic (see Fig. 8) and presents no well-defined elastic limit.

From Hodgkinson's experiments, the laws governing the relations between unit stress and unit deformation were found to be approximately expressed thus:

For tension:

$$S = 1{,}400{,}000s(1 - 209s)$$

For compression:

$$S = 1{,}300{,}000s(1 - 40s)$$

where

S = unit stress
s = unit deformation.

Since the material does not obey Hooke's law, the ordinary formulas for beams will apply only within narrow limits. The attempt to apply the more complicated formulas of Résal and Andrews-Pearson can only result in a waste of time.[1]

Under such circumstances, it is best to use simple formulas and determine the constants by experiment as has been done in the case of columns (see art. 4).

18. Professor Jenkin's Experiments.— The first, experiments so far reported which throw much light on this particular problem are those made by Professor A. L. Jenkins and reported

[1] For a discussion of these formulas, see Slocum and Hancock's Strength of Materials, Chapter IX, and Proc. A. S. M. E., May, 1910.

by him in the proceedings of the American Society of Mechanical Engineers.[1]

The castings tested by him were eighteen in number and of three different forms, all being models on a reduced scale of ordinary punch or riveter frames somewhat similar to the one shown in Fig. 7.

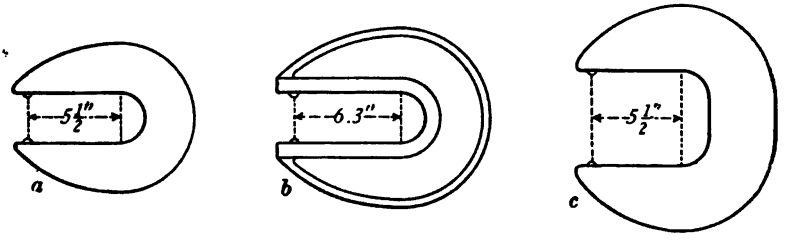

FIG. 9.

Fig. 9 shows the three typical forms chosen: (*a*) Plain section with curved throat; (*b*) ribbed section with curved throat; (*c*) plain section with straight throat. All of the specimens were small, the depth of gap being only 6 or 7 in.

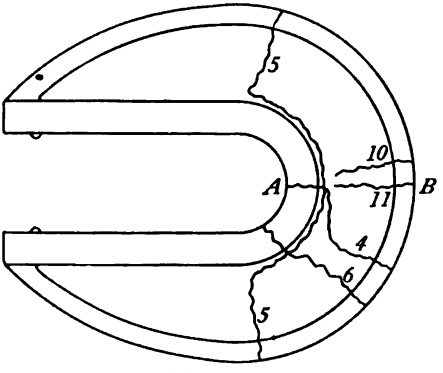

FIG. 10.

Table XIII gives the most important results of the experiments. The stress in the last column was calculated by the formula,

$$S = \frac{My}{I} + \frac{W}{A} \tag{13}$$

the notation being the same as is used elsewhere in this book.

[1] Proc. A. S. M. E., May, 1910.

TABLE XIII

JENKIN'S EXPERIMENTS ON RIVETER FRAMES

	Strength of test bar		Strength of frame section		Remarks
	Tensile stress	Transverse stress	Breaking load	Unit stress (at *A*)	
1	19,100	36,560	11,200	16,240	Same as (*a*), Fig. 9.
2	18,620	44,200	11,125	16,120	
3	19,000	46,080	11,390	16,540	
4	21,630	37,200	9,300	11,330	Same as (*b*), Fig. 9.
5	21,630	40,000	8,500	10,500	
6	18,600	39,000	12,600	22,520	(*b*) with web thickened.
7	18,750	43,000	12,000	9,790	Tested in compression.
8	21,700	46,250	15,300	12,600	
9	22,920	39,600	8,300	10,130	(*b*) with outer flange reduced.
10	20,370	43,700	8,400	10,520	(*b*) with inner flange reduced.
11	23,600	36,400	5,200	18,420	(*b*) with both flanges reduced.
12	23,000	38,000	8,400	10,235	(*b*) with both flanges reduced.
13	24,400	45,000	5,800	.....	(*b*) with both flanges notched.
14	21,800	40,600	12,700	23,920	(*b*) with fillet strengthened.
15	21,400	40,400	12,500	23,400	(*b*) with outer flange removed.
16	21,270	37,800	11,255	16,320	Same as (*c*), Fig. 9.
17	22,080	42,200	11,980	17,270	
18	22,800	41,300	10,600	21,476	Depth of spine reduced.

That is, the tensile strength at the inside flange is the sum of that due to the bending moment and that due to direct tension.

Some of the different lines of fracture are indicated in Fig.10, the number of each line corresponding to the piece number. Number 5 shows an apparent weakness in the web near the flange probably due to cooling strains, since the inner flange was thicker than the web (see cylinder flanges, pp. 80 and 81). Thickening the web as in No. 6 changed this and increased the strength (see Table XIII). When a box section is employed, the change in thickness between the inner plate and the side plate should be gradual.

Removing or reducing the inner flange always weakened the piece (compare Nos. 6 and 10). Removing the outer flange did not always affect the strength (compare Nos. 14 and 15). The specimen with a straight throat of the (*c*) shape usually broke in

the round corner as might be expected from the nature of the material (see Art. 12).

The load-deflection curves obtained in these tests by means of an autographic recorder are similar in character to those obtained by the author from cast-iron beams (see Fig. 8) and show no evidence of a yield-point or an elastic limit. The conclusions reached by Professor Jenkins as a result of these tests are here given verbatim.

"Although these experiments are not sufficiently exhaustive to render any rigid conclusions, they seem to indicate that the following statements are approximately true:

(a) There is no rational method for predicting the strength of curved cast-iron beams suitable for punch and shear frames.

(b) Of the three formulas suggested for the design of punch frames, the well-known beam formula,

$$S = \frac{My}{I} + \frac{W}{A}$$

is the most accurate statement of the law of stress relations existing in such specimens.

(c) The stress behind the inner flange at the curved portion is an important consideration that should be recognized by the designer.

(d) There seems to be no definite relation existing between the strength of a curved cast-iron beam and the transverse strength of a test bar cast with it.

(e) The Résal and Pearson-Andrews formulas are unwieldy and awkward in their application and offer many chances for error."

The somewhat erratic variations of the value of the calculated unit stresses in Table XIII are rather discouraging to the designer but are really no worse than those obtained from simple beams, as may be seen by reference to Tables VIII to XI inclusive.

19. Purdue Tests.—During the past year some experiments on curved frames were conducted by Messrs. Charters, Harter and Luhn of the senior class in the Testing Materials Laboratory of Purdue University.

The characteristic shape and dimensions of the specimens are indicated in Fig. 11, while Fig. 12 shows the piece in position in the testing machine. The load was applied by means of stirrups carrying round steel pins which bore in the milled grooves shown at G, Fig. 11.

The proportions of the frame were copied from those of a large hydraulic riveter made by a reputable firm. The castings were of a uniform quality of soft gray iron and were made in the university foundry.

Test pieces for tension and flexure were cast from the same heat and showed an average tensile strength of about 25,000 lb. and a modulus of rupture of about 41,500 lb.

Twenty-four pieces were broken, the same pattern being used throughout, various modifications being made in the flanges and fillets.

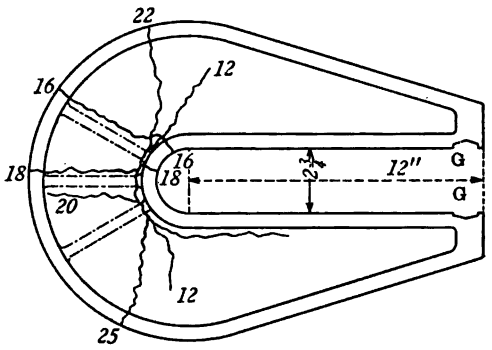

FIG. 11.

The following table shows these modifications in detail and the effect which they had on the strength and stiffness of the frames. Some of the characteristic lines of fracture are shown in Fig. 11, each line being numbered to correspond to the number of the specimen.

The first twelve specimens broke by splitting the web along a curved line parallel to and adjacent to the inner flange. This type of break has already been discussed in Art. 18.

Numbers 13 to 16, inclusive, broke directly across the frames in lines parallel to one of the radial ribs.

Numbers 17 and 18 broke in much the same manner in lines parallel to the one rib.

Numbers 19 and 20 started a fracture in the web adjacent to the rib but this did not extend through the flanges.

The last four frames broke in a practically vertical line through web and flanges just back of the inner flanges.

TABLE XIV

STRENGTH OF CURVED FRAMES OF CAST IRON

No.	Breaking load, pounds	Frames			Test pieces		Remarks
		Deflection at 3000 lb.-in.	Breaking moment, pound-inches	*I* of section	Modulus of rupture	Tensile strength	
1–2–3–4	4,800	.106	62,300	9.85	43,000	25,200	No fillets.
5–6–7–8	5,700	.097	74,200	10.14	43,200	24,700	¼-in. fillets.
9–10–11–12	5,530	.123	73,200	10.00	42,200	23,300	½-in. fillets.
13–14–15–16	7,560	.052	103,500	16.20	43,100	25,600	Two radial ribs.
17–18–19–20	6,630	.090	106,000	20.60	39,000	23,200	One radial rib.
21–22	9,000	.046	118,600	14.13	39,100	28,500	Thicker web 0.6 in.
23–24	3,800	.168	50,800	5.87	37,200	.....	Outer flange removed.

A study of the values given in the table and of the lines of fracture in Fig. 11 shows the difficulty of applying any general formula to this problem.

The general tendency of all the frames which are not reinforced by radial ribs is to split or shear in the web. Probably all of

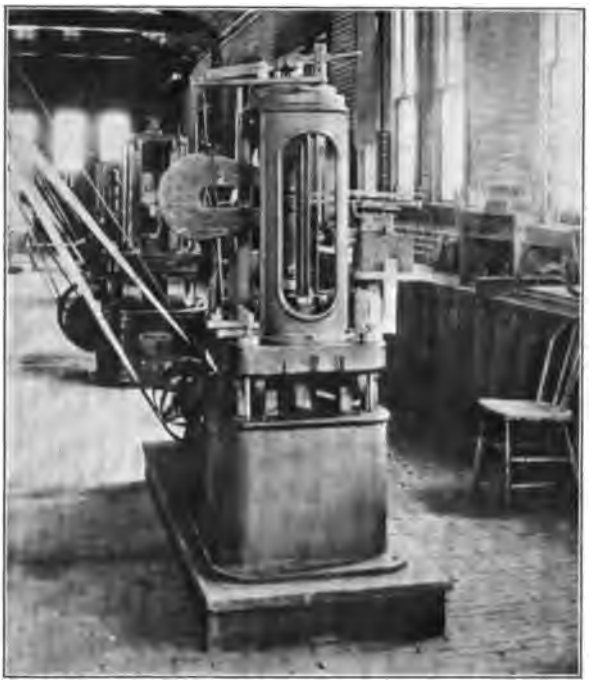

FIG. 12.

the fractures begin in this way and it is more or less a matter of chance whether the fracture extends through the flanges.

When ribs are used, the tendency is still to shear the web alongside of the rib as in 16 and 18, with a possibility of the break not extending through the flanges (see No. 20).

It is apparent that thickening the flanges will do no good, while thickening the web is efficient (see Nos. 21–22). Changing the thickness of web from $\frac{3}{8}$ in. to 0.6 in. increased both strength and stiffness nearly 100 per cent.

Fig. 13.

The addition of $\frac{1}{4}$-in. fillets increased strength and stiffness, while $\frac{1}{2}$-in. fillets were less effective.

Although these experiments were not sufficient in number to justify definite conclusions, it is evident that the web and not the flanges is the weak part of the ordinary *G* frame and that reinforcement of this by increasing its thickness or by the addition of radial ribs is the rational method of treatment.

It is also evident that the experiments just quoted substantiate many of the conclusions reached by Professor Jenkins.

The application of the common formulas for beams to the results given in Table XIV gave values for the unit stress which are contradictory and misleading. The more complicated formula of Bach[1] was equally unsatisfactory.

Further experiments may lead to empirical formulas, which will answer for all ordinary purposes of design.

20. Principles of Design.—In designing a frame for a punch or shear press similar to those shown in Figs. 7 and 9, attention must be paid to the stiffness as well as the strength, since any sensible deflection or distortion will cause trouble with the dies and punches which do the cutting. In future experiments, it is desirable that careful attention be paid to the relative stiffness of various sections. It is probable that the thickness of the web and the weight of the outside flange have much to do with stiff ness and that these have sometimes been neglected when strength alone has been considered.

Formula (13) may be put in the following shape for convenient use:

$$W = \frac{S}{\frac{ly}{I} + \frac{1}{A}} \tag{14}$$

where

W = pressure between dies.
S = safe tensile stress on material.
l = perpendicular distance from line of pressure to neutral axis of section.
$\frac{I}{y}$ = section modulus (tension side).

[1] Bach's Elasticital and Festigheit.

A = area of section.

The formula applies to any horizontal section as AB, Fig. 10. For any inclined section, the equation becomes:

$$W = \frac{S}{\frac{ly}{I} + \frac{\cos \alpha}{A}} \tag{14a}$$

where

α = angle made by the section with the horizontal.

For any section parallel to the line of pressure, the second term in the denominator disappears and the formula is the same as for an ordinary cantilever beam.

The stress in the web at any section in the curved spine of the frame is largely tension and may account in part for a fracture like No. 5 in Fig. 10.

This may be illustrated in Fig. 10 by considering the outer and inner flanges as separate members connected by radial lattice work. It is evident that pressure tending to open the gap would also tend to move the flanges further apart, increase the distance AB and subject the radial lattice bars to tension. To meet this condition, some manufacturers introduce radial ribs as shown in Fig. 7.[1] Some manufacturers provide means for reinforcing the gap in a shear or punch frame by steel stays which can be attached when especially heavy work is to be done. Fig. 13 illustrates a frame of this character. The machine has a 60-in. gap and is capable of punching a $2\frac{1}{4}$-in. hole in $1\frac{1}{4}$-in. iron or shearing a bar of flat iron $1\frac{1}{4} \times 8$ in.

There is always present the possibility that the neutral axis of any section does not exactly coincide with its center of gravity, especially in the curved portion, but the uncertainties of the material itself outweigh any consideration of this sort.

Straight Frames.—Frames which have a straight spine like those of drill presses, slotting machines and profiling machines, are similar in condition to type (*c*), Fig. 9, and have a uniform bending moment in the straight part combined with uniform tension. The condition is that of a column in tension with eccentric loading and the deflection is usually the thing to be considered rather than the strength. This may be illustrated by the ordinary iron clamp such as is used in foundries and

[1] For further discussion of this point, see Professor Jenkin's paper.

pattern shops and which sometimes assumes the shape shown in Fig. 14. Practically the frame is more likely to break at the curved portion joining the column or spine with the horizontal members. This is doubtless due to the shrinkage strains caused by the profile at this point.

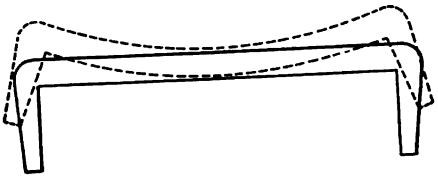

FIG. 14.

The frame of a side-crank engine is a good example of the straight frame with eccentric loading. The points of rupture are apt to be at the junction of the frame with the cylinder flange or near the main bearing.

REFERENCES

Modern American Machine Tools. Benjamin.
Evolution of Machine Tools. *Cass.*, Dec., 1898; *Cass.*, Sept., 1904.
Things that are Usually Wrong. *Am. Mach.*, Mar. 9, 1905.
Design of Boring Mill. *Am. Mach.*, Mar. 8, 1906.
Cast Iron in Machine Frames. *Am. Mach.*, Oct. 24, 1907.
Design of Machine Frames. *Mchy.*, Aug., 1908.

CHAPTER III

CYLINDERS AND PIPES

21. Thin Shells.—Let Fig. 15 represent a section of a thin shell, like a boiler shell, exposed to an internal pressure of p pounds per square inch. Then, if we consider any diameter AB, the total upward pressure on the upper half of the shell will balance the total downward pressure on the lower half and tend to separate the shell at A and B by tension.

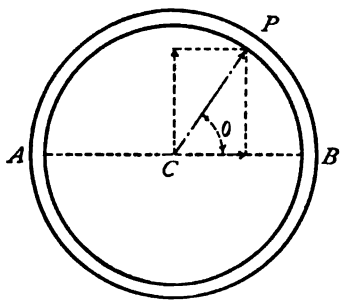

FIG. 15.

Let $d =$ diameter of shell in inches
$r =$ radius of shell in inches
$l =$ length of shell in inches
$t =$ thickness of shell in inches
$S =$ tensile strength of material.

Draw the radial line CP to represent the pressure on the element P of the surface.

Area of element at $P = lrd\theta$.

Total pressure on element $= plrd\theta$.

Vertical pressure on element $= plr \sin \theta d\theta$.

Total vertical pressure on $APB = \int_{\pi}^{0} plr \sin \theta d\theta = 2plr$.

The area to resist tension at A and $B = 2tl$ and its total strength $= 2tlS$.

Equating the pressure and the resistance

$$2tlS = 2plr$$

$$t = \frac{pr}{S} = \frac{pd}{2S} \tag{15}$$

The total pressure on the end of a closed cylindrical shell $= \pi r^2 p$ and the resistance of the circular ring of metal which resists this pressure $= 2\pi rtS$.

Equating:

$$2\pi rSt = \pi r^2 p$$

$$t = \frac{pr}{2S} = \frac{pd}{4S} \tag{16}$$

Therefore a shell is twice as strong in this direction as in the other. Notice that this same formula would apply to spherical shells.

In calculating the pressure due to a head of water equal h, the following formula is useful:

$$p = 0.434h \tag{17}$$

In this formula h is in feet and p in pounds per square inch.

PROBLEMS

1. A cast-iron water pipe is 10 in. in internal diameter and the metal is $\frac{3}{8}$ in. thick. What would be the factor of safety, with an internal pressure due to a head of water of 250 ft.?

2. What would be the stress caused by bending due to weight, if the pipe in Ex. 1 were full of water and 24 ft. long, the ends being merely supported?

3. A standard lap-welded steam pipe, 6 in. in nominal diameter is 0.28 in. thick and is tested with an internal pressure of 500 lb. per square inch. What is the bursting pressure and what is the factor of safety above the test pressure, assuming $S = 40{,}000$?

22. Thick Shells.—There are several formulas for thick cylinders and no one of them is entirely satisfactory. It is, however, generally admitted that the tensile stress caused by internal pressure in such a cylinder is greatest at the inner circumference and diminishes according to some law from there to the exterior of the shell. This law of variation is expressed differently in the different formulas.

Barlow's Formulas.—Here the cylinder diameters are assumed

to increase under the pressure, but in such a way that the volume of metal remains constant. Experiment has proved that in extreme cases this last assumption is incorrect. Within the limits of ordinary practice it is, however, approximately true.

Let d_1 and d_2 be the interior and exterior diameters in inches and let $t=\frac{d_2-d_1}{2}$ be the thickness of metal.

Let l be the length of cylinder in inches.

Let S_1 and S_2 be the tensile stresses in pounds per square inch at inner and outer circumferences.

The volume of the ring of metal before the pressure is applied will be:

$$V_1=\frac{\pi l}{4}(d_2^2-d_1^2)$$

and if the two diameters are assumed to increase the amounts x_1 and x_2 under pressure the final volume will be:

$$V_2=\frac{\pi l}{4}[(d_2+x_2)^2-(d_1+x_1)^2]$$

Assuming the volume to remain the same:

$$d_2^2-d_1^2=(d_2+x_2)^2-(d_1+x_1)^2$$

Neglecting the squares of x_1 and x_2 this reduces to:

$$d_1x_1=d_2x_2$$

or the distortions are inversely as the diameters.

The unit deformations will be proportional to

$$\frac{x_1}{d_1} \text{ and } \frac{x_2}{d_2}$$

and the stresses S_1 and S_2 will be in the same ratio:

$$\frac{S_1}{S_2}=\frac{x_1d_2}{x_2d_1}=\frac{d_2^2}{d_1^2} \qquad (a)$$

or the stresses vary inversely as the squares of the diameters. Let S be the stress at any diameter d, then:

$$S=\frac{S_1d_1^2}{d^2}=\frac{S_1r_1^2}{r^2} \qquad \text{(where } r \text{ is radius)}$$

and the total stress on an element of the area $l.dr$ is:

$$\frac{S_1r_1^2}{r^2}\,ldr=S_1r_1^2l.\,\frac{dr}{r^2}.$$

Integrating this expression between the limits $\frac{d_2}{2}$ and $\frac{d_1}{2}$ for r and multiplying by 2 we have:

$$P = 2S_1 r_1^2 l\left(\frac{2}{d_1} - \frac{2}{d_2}\right) = 2S_1 l \frac{d_1 t}{d_1 + 2t}. \qquad (b)$$

Equating this to the pressure which tends to produce rupture, pdl, where p is the internal unit pressure, there results:

$$p = \frac{2S_1 t}{d_1 + 2t}. \qquad (18)$$

The formula (15) for thin shells gives $p = \frac{2St}{d}$.

By comparing this with formula (18) it will be seen that in designing thick shells the external diameter determines the working pressure or:

$$p = \frac{2S_1 t}{d_2}. \qquad (18a)$$

Lamé's Formula.—In this discussion each particle of the metal is supposed to be subjected to radial compression and to

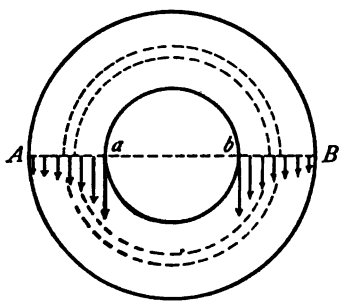

FIG. 16.

tangential and longitudinal tension and to be in equilibrium under these stresses.

Using the same notation as in previous formula:

$$S_1 = \frac{d_2^2 + d_1^2}{d_2^2 - d_1^2} p_1 \qquad (19)$$

for the maximum stress at the interior, and

$$S_2 = \frac{2d_1^2}{d_2^2 - d_1^2} p_1 \tag{20}$$

for the stress at the outer surface.

Fig. 16 illustrates the variation in S from inner to outer surface.

Solving for d_2 in (19) we have

$$d_2 = d_1 \sqrt{\frac{S_1 + p_1}{S_1 - p_1}}. \tag{21}$$

A discussion of Lamé's formula may be found in most works on strength of materials.

PROBLEMS

1. A hydraulic cylinder has an inner diameter of 12 in., a thickness of 4 in. and an internal pressure of 1500 lb. per square inch. Determine the maximum stress on the metal by Barlow's and Lamé's formulas.

2. Design a cast-iron cylinder 8 in. internal diameter to carry a working pressure of 1200 lb. per square inch with a factor of safety of 10.

3. A cast-iron water pipe is 1 in. thick and 18 in. internal diameter. Required head of water which it will carry with a factor of safety of 6.

23. Steel and Wrought-iron Pipe.—Pipe for the transmission of steam, gas or water may be made of wrought iron or steel. Cast iron is used for water mains to a certain extent, but its use for either steam or gas has been mostly abandoned. The weight of cast-iron pipe and its unreliability forbid its use for high pressure work.

Wrought-iron pipe up to and including 1 in. in diameter is usually butt-welded, and above that is lap-welded. Steel pipes may be either welded or may be drawn without any seam. Electric welding has been successfully applied to all kinds of steel tubing, both for transmitting fluids and for boiler tubes.

The tables on pp. 56 to 61 are taken by permission from the catalogue of the Crane Company and show the standard dimensions for steam pipe and for boiler tubes.

Ordinary standard pipe is used for pressures not exceeding 100 lb. per square inch, extra strong pipe for the pressures prevailing in steam plants where compound and triple expansion engines are used, while the double extra is employed in hydraulic work under the heavy pressures peculiar to that sort of transmission.

Tests made by the Crane Company on ordinary commercial pipe such as is listed in Table XV showed the following pressures:

8 in. diam.	2,000 lb. per square inch.
10 in. diam.	2,300 lb. per square inch.
12 in. diam.	1,500 lb. per square inch.

The pipe was not ruptured at these pressures.

24. Strength of Boiler Tubes.—When tubes are used in a so-called fire-tube boiler with the gas inside and the water outside, they are exposed to a collapsing pressure.

The same is true of the furnace flues of internally fired boilers. Such a member is in unstable equilibrium and it is difficult to predict just when failure will occur.

Experiments on small wrought-iron tubes have shown the collapsing pressure to be about 80 per cent of the bursting pressure. With short tubes set in tube sheets the length would have considerable influence on the strength, but ordinary boiler tubes collapsing at the middle of the length would not be influenced by the setting.

The strength of such tubes is proportional to some function of $\frac{t}{d}$ where t is the thickness and d is the diameter. The formulas heretofore in use are very limited in their application, being founded on experiments covering but a few diameters and thicknesses.

Fairbairn's formula is the oldest and best known of these and was established by him as a result of experiments on wrought-iron flues not over 5 ft. in length and having relatively thin walls.

$$p = 9{,}672{,}000 \frac{t^{2.19}}{ld} \qquad (22)$$

all dimensions being in inches and p being the collapsing pressure.

D. K. Clark gives for large iron flues the following formula:

$$P = \frac{200{,}000\, t^2}{d^{1.75}} \qquad (23)$$

where P is the collapsing pressure in pounds per square inch. These flues had diameters varying from 30 in. to 50 in. and thickness of metal from $\frac{3}{8}$ in. to $\frac{7}{16}$ in.

TABLE XV

Wrought-iron and Steel Steam, Gas and Water Pipe

Table of Standard Dimensions

Diameter.			Nominal Thickness.	Circumference.		Transverse Areas.			Length of Pipe per Square Foot of		Length of Pipe Containing One Cubic Foot.	Nominal Weight per Foot.	Number of Threads per inch of Screw.
Nominal Internal.	Actual External.	Approximate Internal Diameter.		External.	Internal.	External.	Internal.	Metal.	External Surface.	Internal Surface.			
Inches.	Inches.	Inches.	Inches.	Inches.	Inches.	Sq. Inch.	Sq. Inch.	Sq. Inch.	Feet.	Feet.	Feet.	Pounds.	
$\frac{1}{8}$	.405	.27	.068	1.272	.848	.129	.0573	.0717	9.44	14.15	2513.	.241	27
$\frac{1}{4}$	.54	.364	.088	1.696	1.144	.229	.1041	.1249	7.075	10.49	1383.3	.42	18
$\frac{3}{8}$	.675	.494	.091	2.121	1.552	.358	.1917	.1663	5.657	7.73	751.2	.559	18
$\frac{1}{2}$	.84	.623	.109	2.639	1.957	.554	.3048	.2492	4.547	6.13	472.4	.837	14
$\frac{3}{4}$	1.05	.824	.113	3.299	2.589	.866	.5333	.3327	3.637	4.635	270.	1.115	14
1	1.315	1.048	.134	4.131	3.292	1.358	.8626	.4954	2.904	3.645	166.9	1.668	$11\frac{1}{2}$
$1\frac{1}{4}$	1.66	1.38	.14	5.215	4.335	2.164	1.496	.668	2.301	2.768	96.25	2.244	$11\frac{1}{2}$
$1\frac{1}{2}$	1.9	1.611	.145	5.969	5.061	2.835	2.038	.797	2.01	2.371	70.66	2.678	$11\frac{1}{2}$
2	2.375	2.067	.154	7.461	6.494	4.43	3.356	1.074	1.608	1.848	42.91	3.609	$11\frac{1}{2}$
$2\frac{1}{2}$	2.875	2.468	.204	9.032	7.753	6.492	4.784	1.708	1.328	1.547	30.1	5.739	8
3	3.5	3.067	.217	10.996	9.636	9.621	7.388	2.243	1.091	1.245	19.5	7.536	8

TABLE XV—(*Continued*)

WROUGHT-IRON AND STEEL STEAM, GAS AND WATER PIPE

Table of Standard Dimensions

Diameter.			Nominal Thickness.	Circumference.		Transverse Areas.			Length of Pipe per Square Foot of		Length of Pipe Containing One Cubic Foot.	Nominal Weight per Foot.	Number of Threads per Inch of Screw.
Nominal Internal.	Actual External.	Approximate Internal Diameter.		External.	Internal.	External.	Internal.	Metal.	External Surface.	Internal Surface.			
Inches.	Inches.	Inches.	Inches.	Inches.	Inches.	Sq. Inch.	Sq. Inch.	Sq. Inch.	Feet.	Feet.	Feet.	Pounds.	
3½	4.	3.548	.226	12.566	11.146	12.566	9.887	2.679	.955	1.077	14.57	9.001	8
4	4.5	4.026	.237	14.137	12.648	15.904	12.73	3.174	.849	.949	11.31	10.665	8
4½	5.	4.508	.246	15.708	14.162	19.635	15.961	3.674	.764	.848	9.02	12.49	8
5	5.563	5.045	.259	17.477	15.849	24.306	19.99	4.316	.687	.757	7.2	14.502	8
6	6.625	6.065	.28	20.813	19.054	34.472	28.888	5.584	.577	.63	4.98	18.762	8
7	7.625	7.023	.301	23.955	22.063	45.664	38.738	6.926	.501	.544	3.72	23.271	8
8	8.625	7.982	.322	27.096	25.076	58.426	50.04	8.386	.443	.478	2.88	28.177	8
9	9.625	8.937	.344	30.238	28.076	72.76	62.73	10.03	.397	.427	2.29	33.701	8
10	10.75	10.019	.366	33.772	31.477	90.763	78.839	11.924	.355	.382	1.82	40.065	8
11	11.75	11.	....	36.914	34.558	108.434	95.033	13.401	.325	.347	1.51	45.028	8
12	12.75	12.	....	40.055	37.7	127.677	113.098	14.579	.299	.319	1.27	48.985	8

TABLE XVI

Wrought-iron and Steel Extra Strong Pipe

Table of Standard Dimensions

Diameter.			Nominal Thickness.	Nearest Wire Gauge.	Circumference.		Transverse Areas.			Length of Pipe per Square Foot of		Nominal Weight per Foot.
Nominal Internal.	Actual External.	Approximate Internal Diameter.			External.	Internal.	External.	Internal.	Metal.	External Surface.	Internal Surface.	
Inches.	Inches.	Inches.	Inches.	No.	Inches.	Inches.	Sq. Inches.	Sq. Inches.	Sq. Inches.	Feet.	Feet.	Pounds.
⅛	.405	.205	.1	12½	1.272	.644	.129	.033	.096	9.433	18.632	.29
¼	.54	.294	.123	11	1.696	.924	.229	.068	.161	7.075	12.986	.54
⅜	.675	.421	.127	10½	2.121	1.323	.358	.139	.219	5.657	9.07	.74
½	.84	.542	.149	9	2.639	1.703	.554	.231	.323	4.547	7.046	1.09
¾	1.05	.736	.157	8½	3.299	2.312	.863	.452	.414	3.637	5.109	1.39
1	1.315	.951	.182	7	4.131	2.988	1.358	.71	.648	2.904	4.016	2.17
1¼	1.66	1.272	.194	6½	5.215	3.996	2.164	1.271	.893	2.301	3.006	3.
1½	1.9	1.494	.203	6	5.969	4.694	2.835	1.753	1.082	2.01	2.556	3.63
2	2.375	1.933	.221	5	7.461	6.073	4.43	2.985	1.495	1.608	1.975	5.02
2½	2.875	2.315	.28	2	9.032	7.273	6.492	4.209	2.283	1.328	1.649	7.67
3	3.5	2.892	.304	1	10.996	9.085	9.621	6.569	3.052	1.091	1.328	10.25
3½	4.	3.358	.321	0	12.566	10.549	12.566	8.856	3.71	.955	1.137	12.47
4	4.5	3.818	.341	0	14.137	11.995	15.904	11.449	4.455	.849	1.	14.97
5	5.563	4.813	.375	00	17.477	15.120	24.306	18.193	6.12	.687	.793	20.54
6	6.625	5.75	.437	000	20.813	18.064	34.472	25.967	8.505	.577	.664	28.58

Extra Strong Pipe is always shipped without Threads or Couplings, unless otherwise specified.

TABLE XVII

Wrought-iron and Steel Double Extra Strong Pipe

Table of Standard Dimensions

Diameter.			Nominal Thickness.	Nearest Wire Gauge.	Circumference.		Transverse Areas.			Length of Pipe per Square Foot of		Nominal Weight per Foot.
Nominal Internal.	Actual External.	Approximate Internal Diameter.			External.	Internal.	External.	Internal.	Metal.	External Surface.	Internal Surface.	
Inches.	Inches.	Inches.	Inches.	No.	Inches.	Inches.	Sq. Inches.	Sq. Inches.	Sq. Inches.	Feet.	Feet.	Pounds.
½	.84	.244	.298	1	2.639	.766	.554	.047	.507	4.547	15.667	1.7
¾	1.05	.422	.314	1	3.299	1.326	.866	.139	.727	3.637	9.049	2.44
1	1.315	.587	.364	00	4.131	1.844	1.358	.271	1.087	2.904	6.508	3.65
1¼	1.66	.885	.388	00	5.215	2.78	2.164	.615	1.549	2.304	4.317	5.2
1½	1.9	1.088	.406	000	5.969	3.418	2.835	.93	1.905	2.01	3.511	6.4
2	2.375	1.491	.442	0000	7.461	4.684	4.43	1.744	2.686	1.608	2.561	9.02
2½	2.875	1.755	.560	9 16—	9.032	5.513	6.492	2.419	4.073	1.328	2.176	13.68
3	3.5	2.284	.608	⅝—	10.996	7.175	9.621	4.097	5.524	1.091	1.672	18.56
3½	4.	2.716	.642	⅝×	12.566	8.533	12.566	5.794	6.772	.955	1.406	22.75
4	4.5	3.136	.682	11/16—	14.137	9.852	15.904	7.724	8.18	.849	1.217	27.48
5	5.563	4.063	.75	¾	17.477	12.764	24.306	12.965	11.34	.687	.940	38.12
6	6.625	4.875	.875	⅞	20.813	15.315	34.472	18.666	15.806	.577	.784	53.11

Double Extra Strong Pipe is always shipped without Threads or Couplings, unless otherwise specified.

TABLE XVIII

Lap-welded Steel or Charcoal Iron Boiler Tubes

Table of Standard Dimensions

Diameter.		Nominal Thickness.	Wire Gauge	Circumference.		Transverse Areas.			Length of Tube per Square Foot of		Nominal Weight per Foot.
External.	Internal.			External.	Internal.	External.	Internal.	Metal.	External Surface.	Internal Surface.	
Inches.	Inches.	Inches.	No.	Inches.	Inches.	Sq. Inch.	Sq. Inch.	Sq. Inch.	Feet.	Feet.	Pounds.
1	.856	.095	13	3.142	2.689	.785	.575	.21	3.819	4.462	.90
1¼	1.106	.095	13	3.927	3.475	1.227	.961	.266	3.056	3.453	1.15
1½	1.334	.095	13	4.712	4.191	1.767	1.398	.369	2.547	2.863	1.40
1¾	1.56	.095	13	5.498	4.901	2.405	1.911	.494	2.183	2.448	1.66
2	1.81	.095	13	6.283	5.686	3.142	2.573	.569	1.909	2.11	1.91
2¼	2.06	.095	13	7.069	6.472	3.976	3.333	.643	1.698	1.854	2.16
2½	2.282	.109	12	7.854	7.169	4.909	4.09	.819	1.528	1.674	2.75
2¾	2.532	.109	12	8.639	7.954	5.94	5.035	.905	1.389	1.509	3.04
3	2.782	.109	12	9.425	8.74	7.069	6.079	.99	1.273	1.373	3.33
3¼	3.01	.12	11	10.21	9.456	8.296	7.116	1.18	1.175	1.26	3.96
3½	3.26	.12	11	10.996	10.241	9.621	8.347	1.274	1.091	1.172	4.28
3¾	3.51	.12	11	11.781	11.027	11.045	9.676	1.369	1.018	1.088	4.6
4	3.732	.134	10	12.566	11.724	12.566	10.939	1.627	.955	1.024	5.47
4½	4.232	.134	10	14.137	13.295	15.904	14.066	1.838	.849	.902	6.17
5	4.704	.148	9	15.708	14.778	19.635	17.379	2.256	.764	.812	7.58

TABLE XVIII—(*Continued*)

LAP-WELDED STEEL OR CHARCOAL IRON BOILER TUBES

Table of Standard Dimensions

Diameter.		Nominal Thickness.	Wire Gauge	Circumference.		Transverse Areas.			Length of Tube per Square Foot of		Nominal Weight per Foot.
External.	Internal.			External.	Internal.	External.	Internal.	Metal.	External Surface.	Internal Surface.	
Inches.	Inches.	Inches.	No.	Inches.	Inches.	Sq. Inch.	Sq. Inch.	Sq. Inch.	Feet.	Feet.	Pounds.
6	5.67	.165	8	18.85	17.813	28.274	25.249	3.025	.637	.673	10.16
7	6.67	.165	8	21.991	20.954	38.485	34.942	3.543	.546	.573	11.9
8	7.67	.165	8	25.133	24.096	50.266	46.204	4.062	.477	.498	13.65
9	8.64	.18	7	28.274	27.143	63.617	58.629	4.988	.424	.442	16.76
10	9.594	.203	6	31.416	30.14	78.54	72.292	6.248	.382	.398	21.
11	10.56	.22	5	34.558	33.175	95.033	87.583	7.45	.347	.362	25.03
12	11.542	.229	4½	37.699	36.26	113.098	104.629	8.469	.319	.33	28.46
13	12.524	.238	4	40.841	39.345	132.733	123.19	9.543	.294	.305	32.06
14	13.504	.248	3½	43.982	42.424	153.938	143.224	10.714	.273	.283	36.
16	15.432	.270	2½	50.26	48.48	201.06	187.04	14.02	.239	.248	45.20

NOTE.—In estimating effective steam-heating or evaporating surface of tubes, the surface in contact with air or gases of combustion, according to manner of application, as whether internal or external, is to be thus taken. For heating liquids by steam, superheating steam, or transferring heat from one liquid or one gas to another, mean surface of tubes to be computed.

In 1906, Professor R. T. Stewart reported to the American Society of Mechanical Engineers some very comprehensive and interesting experiments on lap-welded boiler tubes of Bessemer steel.[1]

The tests were conducted at the works of the National Tube Company on tubes manufactured by that firm and were in progress for four years.

Two series of experiments were made—one on tubes 8⅝ in. outside diameter of different thicknesses and of different lengths, for the purpose of testing the applicability of existing formulas to tubes of this character; one on tubes 20 ft. long and of different diameters and thicknesses for the purpose of establishing empirical formulas for the strength of such tubes.

The formulas of Fairbairn, Clark, Unwin, Grashof, etc., were tested by comparison with the results of the first series of experiments and were all found inapplicable, sometimes giving less than one-third the actual collapsing pressure.

The general conclusions reached by Professor Stewart are thus stated by him:

"1. The length of tube, between transverse joints tending to hold it to a circular form, has no practical influence upon the collapsing pressure of a commercial lap-welded steel tube, so long as this length is not less than about six diameters of tube.

2. The formulas, as based upon the present research, for the collapsing pressure of modern lap-welded Bessemer steel tubes, are as follows:

$$P = 1000\left(1 - \sqrt{1 - 1600\frac{t^2}{d^2}}\right) \qquad \text{(A)}$$

$$P = 86{,}670\frac{t}{d} - 1386. \qquad \text{(B)}$$

Where P = collapsing pressure, pounds per square inch
d = outside diameter of tube in inches
t = thickness of wall in inches.

Formula (A) is for values of P less than 581 lb., or for values of $\frac{t}{d}$ less than 0.023, while formula (B) is for values greater than these.

[1] Trans. A. S. M. E., Vol. XXVII.

These formulas, while strictly correct for tubes that are 20 ft. in length between transverse joints tending to hold them to a circular form, are, at the same time, substantially correct for all lengths greater than about six diameters.

They have been tested for seven diameters, ranging from 3 to 10 in., in all obtainable thicknesses of wall, and are known to be correct for this range.

3. The apparent fiber stress under which the different tubes failed varied from about 7000 lb. for the relatively thinnest to 35,000 lb. per square inch for the relatively thickest walls.

Since the average yield-point of the material was 37,000 and the tensile strength 58,000 lb. per square inch, it would appear that the strength of a tube subjected to a collapsing fluid pressure is not dependent alone upon either the elastic limit or ultimate strength of the material constituting it."

The following tables are condensed from those published by Professor Stewart and give average dimensions and pressures for each size tested, each result being the average of five tubes:

The reader is referred to the published paper for further details of this most valuable contribution to a hitherto neglected subject.

25. Theory.—In January, 1911, Professor Stewart presented a discussion of the theory of collapsed tubes based on the experiments above described.[1] Considering a ring or annulus of the tube 1 in. long near the middle of its length, he treats each half of the ring as a column fixed at both ends and compressed uniformly along its center line, *abc*, Fig. 17.

The ring is subjected to a uniform radial external pressure of p pounds per square inch and is therefore in the same condition as the thin shell in Art. 21 except that the resultant stress is now compression instead of tension. By equation (15),

$$S = \frac{pr}{t} = \frac{pd}{2t}$$

and

$$p = \frac{2tS}{d} \qquad \text{(a)}$$

[1] Trans. A. S. M. E., Vol. XXXIII.

TABLE XIX

COLLAPSING PRESSURE OF TUBES

Test number	Average outside diameter, inches	Average thickness of wall, inches	Actual length of tube, feet	Collapsing pressure, pounds per square inch
1	8.643	0.185	20.026	536
2	8.653	0.184	15.010	548
3	8.656	0.178	10.002	548
4	8.658	0.180	5.006	592
5	8.656	0.176	2.512	977
6	8.642	0.215	13.140	847
7	8.663	0.219	11.801	835
8	8.669	0.214	10.007	845
9	8.661	0.212	4.997	907
10	8.657	0.212	2.507	1,314
11	8.666	0.267	19.995	1,438
12	8.652	0.272	14.996	1,540
13	8.668	0.267	9.993	1,533
14	8.656	0.268	4.993	1,636
15	8.662	0.268	2.494	1,784
16	8.657	0.273	19.387	1,347
17	8.659	0.275	14.995	1,421
18	8.671	0.271	10.003	1,541
19	8.672	0.280	4.997	1,731
20	8.653	0.269	2.505	1,961
21	8.656	0.294	19.999	1,686
22	8.654	0.308	14.987	1,791
23	8.649	0.305	9.989	1,810
24	8.654	0.306	4.993	2,073
25	8.646	0.311	2.509	2,397
26	6.017	0.128	20.000	519
27	6.017	0.131	20.000	529
28	6.022	0.167	20.000	969
29	6.026	0.166	20.000	924
30	6.032	0.163	20.000	917
31	6.033	0.170	20.000	1,007
32	6.023	0.189	20.000	1,318
33	6.021	0.212	20.000	1,457
34	6.015	0.206	20.000	1,555
35	6.022	0.186	20.000	1,188
36	6.032	0.263	20.000	2,139

TABLE XIX—(*Continued*)

COLLAPSING PRESSURE OF TUBES

Test number	Average outside diameter, inches	Average thickness of wall, inches	Actual length of tube, feet	Collapsing pressure, pounds per square inch
37	6.034	0.264	20.000	2,381
38	6.654	0.164	20.000	678
39	6.684	0.200	20.000	1,184
40	6.666	0.253	20.000	2,081
41	7.044	0.160	20.000	563
42	7.050	0.242	20.000	1,680
43	6.661	0.154	20.000	563
44	6.655	0.269	20.100	2,214
45	6.681	0.249	20.100	1,745
46	6.049	0.266	20.110	2,528
47	8.643	0.185	20.000	536
48	8.642	0.215	14.133	847
49	8.666	0.267	19.995	1,438
50	8.657	0.273	19.550	1,347
51	8.656	0.293	20.000	1,686
52	8.663	0.305	20.100	1,756
53	8.673	0.354	20.080	2,028
54	6.987	0.279	20.170	2,147
55	7.011	0.160	20.170	621
56	5.993	0.271	20.180	2,487
57	10.041	0.165	20.180	225
58	10.026	0.194	20.110	383
59	10.001	0.316	20.180	1,319
60	3.993	0.119	20.170	964
61	4.014	0.175	20.190	2,280
62	4.026	0.212	20.190	3,170
63	4.014	0.327	20.100	5,560
64	3.000	0.109	20.000	1,733
65	2.994	0.113	20.000	1,962
66	2.992	0.143	20.000	2,963
67	2.995	0.188	20.100	4,095
68	10.779	0.512	19.470	2,585
69	12.790	0.511	19.960	2,196
70	13.036	0.244	20.000	463

This stress is uniform from end to end as is the case with the loaded straight column in Fig. 18. Furthermore, the characteristic shape assumed by the collapsed tube, as shown in dotted lines in Fig. 17, has its tangents at a' and c' parallel to their original position at a and c, corresponding to the conditions for buckling of a column with fixed ends shown by dotted lines in Fig. 18.

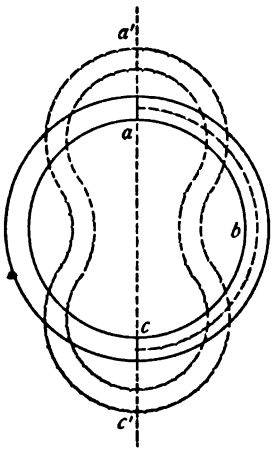

FIG. 17.

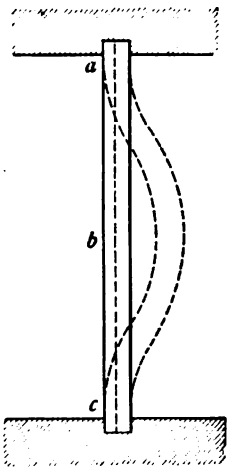

FIG. 18.

Let l = length of equivalent column
r = radius of gyration of section of column

Then will $l = \frac{\pi}{2}(d - t)$ (b)

(where d = outer diameter of tube)
and

$$r = \sqrt{\frac{t^2}{12}} = \frac{t}{3.464} \qquad \text{(c)}$$

By Professor Stewart's formula (B)

$$P = 86{,}670\frac{t}{d} - 1386$$

From (a) and (B) by equating:

$$\frac{2tS}{d} = 86{,}670\frac{t}{d} - 1386$$

and

$$S = 43{,}335 - 693\frac{d}{t} \tag{d}$$

From (b):

$$\frac{d}{t} = \frac{2l}{\pi t} + 1$$

Substituting value of t from (c):

$$\frac{d}{t} = \frac{2l}{3.464\pi r} + 1 = 0.1838\ \frac{l}{r} + 1 \tag{e}$$

Substituting this value of $\frac{d}{t}$ in (d) and reducing:

$$S = 42{,}642 - 127.4\frac{l}{r} \tag{24}$$

corresponding to the straight line formula for columns (see Table Ia).

Professor Stewart suggests as a substitute for formula (A) p. 62, the following:

$$P = 50{,}210{,}000\left(\frac{t}{d}\right)^3. \tag{G}$$

26. Tube Joints.—The failure of boiler tubes, especially of those having water or steam pressure inside, is frequently due to slipping of the tube in the plate or fitting to which it joins. Such tubes are expanded in the plate by the use of a roller or Dudgeon expander and are sometimes flared or beaded on the outside for additional security. Under pressure, the tubes often slip in the holes so as to cause failure of the joint or at least leakage of the contained fluid.

Some experiments made by Professors O. P. Hood and G. L. Christiansen were reported by them in 1908 and give the most reliable information on this subject.[1]

The tests were made on 3-in., twelve-gage, cold drawn Shelby tubes rolled into holes in plates of various thicknesses and reamed in various shapes. Some of the tubes were flared outside the plate and some not.

Initial slip occurred at total pressures of from 5000 to 10,000 lb. or from one-sixth to one-third the elastic limit of the material

[1] Trans. A. S. M. E., Vol. XXX.

of the tube. The ultimate holding power was usually about double the slipping load.

The coefficient of friction varied from 26 to 35 per cent, assuming the elastic limit to vary between 30,000 and 40,000 lb.

The total friction per square inch of bearing area was about 750 lb. Various degrees of rolling and various forms of tapered hole did not seem to affect the initial slipping load materially. Serrating the bearing surface of the hole had a very marked effect, raising the initial slipping load in some instances as high as 40,000 to 45,000 lb., or more than the elastic limit of the tube.

The slipping point of the tube bears a certain analogy to the yield-point in metals and the diagrams of pressure and slip much resemble the stress-strain diagrams of soft steel.

It is apparent from these experiments that overrolling has no advantages and that flaring the tubes will not prevent leakage.

The fact that ordinarily slipping will occur at a pressure well inside the elastic limit of the material shows that timely warning will be given by leakage before there is any danger of failure.

27. Tubes under Concentrated Loads.—In 1893, the author made some experiments on steel hoops to determine the strength and stiffness under a concentrated load applied in the direction of a diameter.[1]

Large steel tubes with relatively thin walls are sometimes exposed to external compression at the point of support causing distortion and occasionally permanent injury.

The hoops tested were made of mild steel boiler plate, having a tensile strength of 60,000 lb. and a modulus of elasticity of 30,000,000, cut into strips 2.5 in. wide, bent to a circular form and welded. Each hoop was compressed laterally in a testing machine until failure occurred, vertical and horizontal diameters being measured at regular intervals.

Regarding the hoop as composed of two semi-circular columns fixed at the ends and each having a constant deflection of one-half the mean diameter, it is evident that a treatment is allowable similar to that used in Rankine's formula for columns (formula (12)).

The increase in deflection for loads inside the elastic limit is small compared with the length of the hoop radius.

[1] *Jour. Assoc. Eng. Soc.*, Dec., 1893.

Let $P=$ load in pounds at elastic limit
$D=$ inner horizontal diameter in inches
$b=$ breadth of hoop in inches
$t=$ thickness of ring
$S=$ stress on inner fibers at extremity of horizontal diameter.

Then as in Rankine's formula:

$$S=\frac{P}{2bt}+\frac{6M}{bt^2}. \qquad \text{(a)}$$

Where M is the bending moment at extremity of horizontal diameter.

Assume $M=kPD$.

Then

$$S=\frac{P}{2bt}\left(1+12k\frac{D}{t}\right)$$
$$=\frac{P}{2bt}\left(1+q\frac{D}{t}\right) \qquad \text{(b)}$$

where $q=$empirical constant.

The average value of q as determined by experiment was

$$q=0.946.$$

Substituting this value in (b) and solving for P, we have:

$$P=\frac{2btS}{1+0.946\frac{D}{t}}. \qquad (25)$$

Table XX gives the principal data and results of experiment.

In determining the value of q from the experiments, S was assumed to be the same as the elastic limit in compression of a straight specimen of the same metal.

The limited number of hoops tested and the method of their construction forbids the application of formula (25) to general cases of this character. It is offered here merely as a guide in design.

28. Pipe Fittings.—Steam pipe up to and including pipe 2 in. in diameter is usually equipped with screwed fittings, including ells, tees, couplings, valves, etc.

Pipe of a larger size, if used for high pressures, should be put together with flanged fittings and bolts. One great advantage of

TABLE XX

STIFFNESS OF HOOPS

No.	Vertical inside diameter D'	Horizontal inside diameter D	Breadth b	Thickness d	Elastic limit tension	Elastic limit compression S	Elastic limit of hoop P	Change in D' under P	Change in D under P	Average change
1	17.27	17.38	2.39	0.397	30,850	31,810	1,400	0.57	0.52	0.545
2	14.23	14.29	2.375	0.397	30,850	31,810	1,800	0.35	0.23	0.29
3	11.27	11.25	2.406	0.405	30,850	31,810	2,300	0.22	0.20	0.21
4	8.08	8.19	2.39	0.397	30,850	31,810	3,400	0.18	0.17	0.175
5	15.03	15.09	2.344	0.429	50,070	43,070	2,200	0.37	0.37	0.37
6	15.10	14.98	2.344	0.307	40,680	42,240	1,400	0.88	0.68	0.78
7	15.03	15.02	2.344	0.277	36,370	35,280	800	0.55	0.44	0.50

the latter system is the fact that a section of pipe can easily be removed for repairs or alterations.

Small connections are usually made of cast iron or malleable iron. While the latter are neater in appearance they are more apt to stretch and cause leaky joints. The larger fittings are made of cast iron or cast steel. Such fittings can be obtained in various weights and thicknesses, to correspond to those grades of pipe listed in the tables.

The designer should have at hand catalogues of pipe fittings from the various manufacturers, as these will give in detail the proportions of all the different connections.

For pressures not exceeding 100 lb. per square inch rubber and asbestos gaskets can be used between the flanges, but for higher pressures or for superheated steam, corrugated metallic gaskets are necessary.

In 1905 some very interesting experiments on the strength of standard screwed elbows and tees were made by Mr. S. M. Chandler, a graduate of the Case School, and published by him in *Power* for October, 1905.

The fittings were taken at random from the stock of the Pittsburg Valve and Fittings Co., and three of each size were tested to destruction by hydraulic pressure.

The following table gives a summary of the results obtained. The values which are starred in the table were obtained from fittings which had purposely been cast with the core out of center so as to make one wall thinner than the other. These values are not included in the averages.

These tests show a large apparent factor of safety for any pressures to which screwed fittings are usually subjected.

The failure of such fittings in practice must be attributed to faulty workmanship in erection, such as screwing too tight, lack of allowance for expansion and poor drainage.

The average tensile strength of the cast iron used in the above fittings was 20,000 lb. per square inch.

29. Flanged Fittings.—In 1907, the Crane Company published the results of a series of tests made on flanged tees and ells manufactured by that company.[1]

The fittings were tested by hydraulic pressure, a blank flange

[1] *Valve World*, Nov., 1907.

TABLE XXI

BURSTING STRENGTH OF STANDARD SCREWED FITTINGS, PRESSURES IN POUNDS PER SQUARE INCH

Size		Elbows		Average
2½	3,500	3,300	3,400	3,400
3	2,400	2,600	2,100*	2,500
3½	2,100	1,700*	2,400	2,250
4	2,800	2,500	2,500	2,600
4½	2,000*	2,600	2,600	2,600
5	2,600	2,500	2,500	2,533
6	2,600	2,200	2,300	2,367
7	1,800	2,100	1,900*	1,950
8	1,700	1,600	1,700	1,667
9	1,800	1,800	1,900	1,833
10	1,800	1,700	1,600	1,700
12	1,100	1,200	900*	1,150
Size		**Tees**		**Average**
1¼	3,400	3,300	3,300	3,333
1½	3,400	3,200	2,800*	3,300
2	2,500	2,800	2,500	2,600
2½	2,400	2,100*	2,500	2,450
3	1,400*	1,900	1,800	1,850
3½	1,200*	1,500	1,800	1,650
4	1,800	2,100	1,700	1,867
4½	1,100*	1,400	1,400	1,400
5	1,700	1,300*	1,500	1,600
6	1,400	1,500	1,100*	1,450
7	1,400	1,400	1,500	1,433
8	1,200*	1,400	1,300	1,350
9	1,300	1,400	1,200	1,300
10	1,100	1,300	1,200	1,200
12	1,100	1,000	1,100	1,067

* Made with eccentric core.

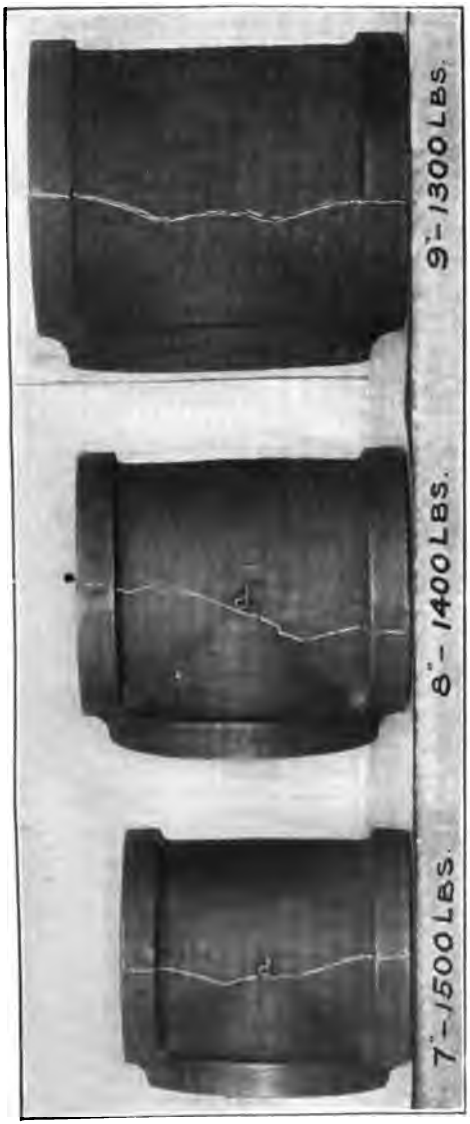

FIG. 19.—FRACTURED TEES, CHANDLER'S EXPERIMENTS.

FIG. 20.—FRACTURED ELLS, CHANDLER'S EXPERIMENTS.

being used to close the opening. Two materials were tried, cast iron having an average tensile strength of 22,000 lb. per square inch and ferro steel having a strength 50 per cent greater.

The results are given as follows:

TABLE XXII

STRENGTH OF FLANGED FITTINGS
EXTRA HEAVY FITTINGS—TEES

Size inches	Body metal inches	Burst ferro-steel lb. per sq. in.	Average	Burst cast iron lb. per sq. in.	Average
6	$\frac{3}{4}$	2,700	.....	.....	.....
6	$\frac{3}{4}$	2,500	.....	1,675	.....
6	$\frac{3}{4}$	3,000	2,733	1,700	1,687
8	$\frac{13}{16}$	2,100	.....	.....	.....
8	$\frac{13}{16}$	2,250	.....	.....	.....
8	$\frac{13}{16}$	2,250	.....	.....	.....
8	$\frac{13}{16}$	2,100	.....	.....	.....
8	$\frac{13}{16}$	2,500	.....	1,200	.....
8	$\frac{13}{16}$	2,300	2,250	1,500	1,350
10	$\frac{15}{16}$	2,200	.....	.....	.....
10	$\frac{15}{16}$	2,200	.....	1,225	.....
10	$\frac{15}{16}$	2,100	.....	1,300	.....
10	$\frac{15}{16}$	2,000	.....	1,200	.....
10	$\frac{15}{16}$	2,300	2,160	1,500	1,306
12	1	2,200	.....	.....	.....
12	1	2,100	.....	1,100	.....
12	1	2,000	.....	1,400	.....
12	1	2,000	.....	1,500	.....
12	1	2,100	.....	1,450	.....
12	1	1,800	2,033	1,450	1,380
14	$1\frac{1}{8}$	1,900	.....	.....	.....
14	$1\frac{1}{8}$	1,750	1,825	1,100	1,100
16	$1\frac{3}{16}$	1,700	.....	1,050	.....
16	$1\frac{3}{16}$	1,700	1,700	1,000	1,025
18	$1\frac{1}{4}$	1,600	.....	.....	.....
18	$1\frac{1}{4}$	1,300	1,450	600	600
20	$1\frac{5}{16}$	1,400	.....	.....	.....
20	$1\frac{5}{16}$	1,150	1,275	750	750
24	$1\frac{1}{2}$	1,300	1,300	700	700

TABLE XXII—(*Continued*)

EXTRA HEAVY FITTINGS—ELLS

Size inches	Body metal inches	Burst ferro-steel lb. per sq. in.	Average	Burst cast iron lb. per sq. in.	Average
6	$\frac{3}{4}$	2,800	.....	.....	.....
6	$\frac{3}{4}$	3,500	.....	2,350	.....
6	$\frac{3}{4}$	3,500	3,266	2,200	2,275
8	$\frac{13}{16}$	2,700	.....	1,700	.....
8	$\frac{13}{16}$	2,800	.....	1,600	.....
8	$\frac{13}{16}$	2,800	.....	1,500	.....
8	$\frac{13}{16}$	2,600	2,725	1,700	1,625
10	$\frac{15}{16}$	2,550	.....	1,625	.....
10	$\frac{15}{16}$	2,000	.....	1,400	.....
10	$\frac{15}{16}$	2,500	2,350	1,600	1,541
12	1	2,000	.....	1,275	.....
12	1	2,200	.....	*900	.....
12	1	2,200	2,133	*700	1,275
14	$1\frac{1}{8}$	1,700	.....	900	.....
14	$1\frac{1}{8}$	.....	.....	1,250	1,075
16	$1\frac{3}{16}$	2,100	.....	1,250	1,250

* Defective, eliminated from total.

STRENGTH OF FLANGED FITTINGS

STANDARD CAST-IRON FITTINGS—TEES

Size inches	Body metal inches	Bursting cast iron lb. per sq. in.	Average
6	$\frac{9}{16}$	1,700	.....
6	$\frac{9}{16}$	1,500	1,600
8	$\frac{5}{8}$	1,150	.....
10	$\frac{3}{4}$	1,100	.....
12	$\frac{13}{16}$	700	.....
12	$\frac{13}{16}$	850	775
14	$\frac{7}{8}$	700	.....
16	1	750	.....
STANDARD CAST-IRON FITTINGS—ELLS			
6	$\frac{9}{16}$	2,000	.....
8	$\frac{5}{8}$	1,500	.....
10	$\frac{3}{4}$	1,200	.....
12	$\frac{13}{16}$	900	.....
14	$\frac{7}{8}$	900	.....
16	1	850	.....

The Company recommends a rule which may be thus stated:

$$p = \frac{cSt}{d} \tag{26}$$

where

p = bursting pressure in lb. per square inch
S = tensile strength of metal
t = thickness of wall in inches
d = inside diameter in inches
c = a constant, 0.65 for sizes up to 12 in. and 0.60 for sizes above that.

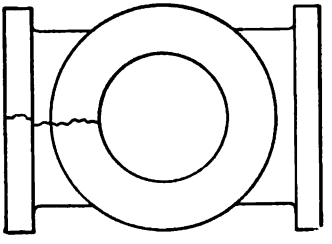

FIG. 21.

A factor of safety of from 4 to 8 is recommended.

The fractures were of various shapes and locations. The usual failure of the tees was by splitting in the plane of the axes from one flange to the next adjacent, Fig. 21.

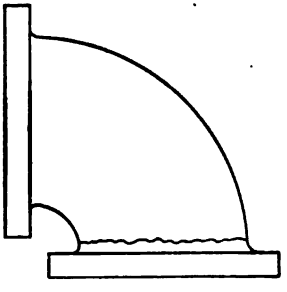

FIG. 22.

About half of the ells failed around a circumference inside one flange (Fig. 22) while six failed by splitting on the inside of the bend.

The effect on cast-iron fittings of high temperatures such as may occur with the use of superheated steam is not clearly understood. Professor Hollis and others report experiments on such fittings which seem to show some deterioration from this cause.[1]

It is probable that most of the failures of pipe fittings in service are due to the excessive expansion and contraction of the pipe lines, incident to the use of high temperatures, rather than to the direct effect of the temperature or pressure.

[1] Trans. A. S. M. E., Vol. XXXI.

A uniform temperature of 600 to 700° fahr. will not injure the cast-iron material, but where the temperature varies considerably, it is best to use some other metal.

PROBLEMS

1. Determine the bursting pressure of a wrought-iron steam pipe 6 in. nominal diameter.
   (*a*) If of standard dimensions.
   (*b*) If extra strong.
   (*c*) If double extra strong.
2. Compare the above with the strength of standard screwed and standard flanged elbows and tees of the same size.
3. Determine the probable collapsing pressure of a soft steel boiler-tube of 2 in. nominal diameter.
4. Ditto, if tube is 6 in. in diameter.

30. Steam Cylinders.—Cylinders of steam engines can hardly be considered as coming under either of the preceding heads. On the one hand the thickness of metal is not enough to insure rigidity as in hydraulic cylinders, and on the other the nature of the metal used, cast iron, is not such as to warrant the assumption of flexibility, as in a thin shell. Most of the formulas used for this class of cylinder are empirical and founded on modern practice.

Van Buren's formula[1] for steam cylinders is:

$$t = .0001pd + .15\sqrt{d} \tag{27}$$

A formula which the writer has developed is somewhat similar to Van Buren's.

Let s' = tangential stress due to internal pressure.

Then by equation for thin shells

$$s' = \frac{pd}{2t}$$

Let s'' be an additional tensile stress due to distortion of the circular section at any weak point.

Then if we regard one-half of the circular section as a beam fixed at A and B (Fig. 23) and assume the maximum bending moment as at C some weak point, the tensile stress on the outer

[1] See Whitham's "Steam Engine Design," p. 27.

fibers at C due to the bending will be proportional to $\frac{pd^2}{t^2}$ by the laws of flexure, or

$$s'' = \frac{cpd^2}{t^2}$$

where c is some unknown constant.

The total tensile stress at C will then be

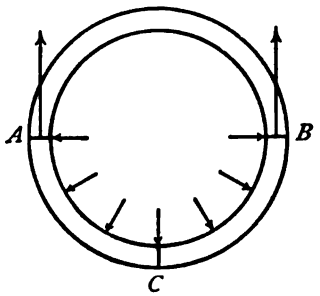

FIG. 23.

$$S = s' + s'' = \frac{pd}{2t} + \frac{cpd^2}{t^2}$$

Solving for c $\quad c = \frac{St^2}{pd^2} - \frac{t}{2d}$ (a)

Solving for t $\quad t = \frac{pd}{4S} + \sqrt{\frac{cpd^2}{S} + \frac{p^2d^2}{16S^2}}$ (28)

a form which reduces to that of equation (15) when $c = 0$.

An examination of several engine cylinders of standard manufacture shows values of c ranging from .03 to .10, with an average value:

$$c = .06.$$

The formula proposed by Professor Barr, in his paper on "Current Practice in Engine Proportions,"[1] as representing the average practice among builders of low-speed engines is:

$$t = .05d + .3 \text{ in.} \tag{29}$$

In Kent's Mechanical Engineer's Pocket Book, the following formula is given as representing closely existing practice:

$$t = .0004dp + 0.3 \text{ in.} \tag{30}$$

[1] Trans. A. S. M. E., Vol. XVIII, p. 741.

This corresponds to Barr's formula if we take $p=125$ lb. per square inch.

Experiments[1] made at the Case School of Applied Science in 1896–97 throw some light on this subject. Cast-iron cylinders similar to those used on engines were tested to failure by water pressure. The cylinders varied in diameter from 6 to 12 in. and in thickness from $\frac{1}{2}$ to $\frac{3}{4}$ in.

Contrary to expectations most of the cylinders failed by tearing around a circumference just inside the flange (see Fig. 24).

Table XXIII gives a summary of the results.

TABLE XXIII

No.	Diam. d	Pressure p	Thickness t	Line of failure	Formulas used			Strength of test bar
					15 $S=\frac{pd}{2t}$	16 $S=\frac{pd}{4t}$	a $c=$	
a	12.16	800	.70	Circum....	6,940	3,470	.046	18,000 lb.
d	12.45	700	.56	Longi.....	7,780	.....	.047	24,000 lb.
e	9.12	1,325	.61	Circum....	9,900	4,950	.048	24,000 lb.
f	6.12	2,500	.65	Circum....	11,800	5,900	.055	24,000 lb.
1	9.58	600	.402	Longi.....	7,150	.....	.049	24,000 lb.
2	9.375	1,050	.573	Circum....	8,590	4,300	.055	24,000 lb.
3	9.13	975	.596	Circum....	7,470	3,740	.072	24,000 lb.
4	12.53	700	.571	Longi.....	7,680	.....	.048	24,000 lb.
5	12.56	875	.531	Circum....	10,350	5,180	.028	24,000 lb.

Average of $c=.05$

Out of nine cylinders so tested, only three failed by splitting longitudinally.

This appears to be due to two causes. In the first place, the flanges caused a bending moment at the junction with the shell due to the pull of the bolts. In the second place, the fact that the flanges were thicker than the shell caused a zone of weakness near the flange due to shrinkage in cooling, and the presence of what founders call "a hot spot."

The stresses figured from formula (16) in the cases where the failure was on a circumference, are from one-fifth to one-sixth the tensile strength of the test bar.

[1] Trans. A. S. M. E., Vol. XIX.

FIG. 24.—FRACTURED CYLINDER.

FIG. 25.—FRACTURED CYLINDER.

The strength of a chain is the strength of the weakest link, and when the tensile stress exceeded the strength of the metal near some blow hole or "hot spot," tearing began there and gradually extended around the circumference.

Values of c as given by equation (a) have been calculated for each cylinder, and agree fairly well, the average value being $c = .05$.

To the criticism that most of the cylinders did not fail by splitting, and that therefore formulas (a) and (22) are not applicable, the answer would be that the chances of failure in the two directions seem about equal, and consequently we may regard each cylinder as about to fail by splitting under the final pressure.

If we substitute the average value of $c = .05$ and a safe value of $S = 2000$, formula (28) reduces to:

$$t = \frac{pd}{8000} + \frac{d}{200}\sqrt{p + \frac{p^2}{1600}}. \tag{31}$$

An application of the Crane formula for cast-iron pipe fittings to some of the results in Table XXIII shows that the conditions are similar.

Using the formula $p = \frac{.6St}{d}$ for cylinders (d) and (4) in the table, we have approximately:

$$p = \frac{.6 \times 24{,}000 \times .57}{12.5} = 656$$

as against an actual value of 700.

In a similar manner, testing cylinder (1) in table, we have:

$$p = \frac{.65 \times 24{,}000 \times .402}{9.58} = 654$$

as against 600 in the table. It will be noted that these are the cylinders which failed by splitting.

Subsequent experiments[1] made at the Case School in 1904 show the effect of stiffening the flanges by brackets.

Four cylinders were tested, each being 10 in. internal diameter by 20 in. long and having a thickness of about $\frac{3}{4}$ in. The flanges were of the same thickness as the shell and were reenforced by sixteen triangular brackets as shown in Fig. 25.

The fractures were all longitudinal there being but little of the

[1] *Mchy.*, N. Y., Nov., 1905.

tearing around the shell which was so marked a feature of the former experiments. This shows that the brackets served their purpose.

Table XXIV gives the results of the tests and the calculated values of c.

TABLE XXIV

BURSTING PRESSURE OF CAST-IRON CYLINDERS

Internal diameter	Average thickness	Bursting pressure	Value of c	$S=\frac{pd}{2t}$
10.125	0.766	1,350	.0213	9,040
10.125	0.740	1,400	.0152	10,200
10.125	0.721	1,350	.0126	9,735
10.125	0.720	1,200	.0177	9,080

Average value of $c=.0167$.

Comparing the values in the above table with those in Table XXIII we find c to be only one-third as large.

The tensile strength of the metal in the last four cylinders, as determined from test bars, was only 14,000 lb. per square inch.

Comparison with the values of S due to direct tension as given by the formula

$$S=\frac{pd}{2t}$$

shows that in a cylinder of this type about one-third of the stress is "accidental" and due to lack of uniformity in the conditions. In Table XXIII about two-thirds must be thus accounted for.

PROBLEMS

1. Referring to Table XXIII, verify in at least three experiments the values of S and c as there given. Do the same in Table XXIV.

2. The steam cylinder of a Baldwin locomotive is 22 in. in diameter and 1.25 in. thick. Assuming 125 lb. gage pressure, find the value of c. Calculate thickness by Van Buren's and Barr's formulas.

3. Determine proper thickness for cylinder of cast iron, if the diameter is 42 in. and the steam pressure 120 lb. by formulas 15, 27, 29, 30 and 31.

4. The cylinder of a stationary engine has internal diameter = 14 in. and thickness of shell = 1.25 in. Find the value of c for $p=120$ lb. per square inch.

31. Thickness of Flat Plates.—An approximate formula for the thickness of flat cast-iron plates may be derived as follows:

Let l = length of plate in inches
b = breadth of plate in inches
t = thickness of plate in inches
p = intensity of pressure in pounds
S = modulus of rupture pounds per square inch.

A plate which is supported or fastened at all four edges is constrained so as to bend in two directions at right angles. Now if we suppose the plate to be represented by a piece of basket work with strips crossing each other at right angles we may consider one set of strips as resisting one species of bending and the other set as resisting the other bending. We may also consider each set of strips as carrying a fraction of the total load. The equation of condition is that each pair of strips must have a common deflection at the crossing.

Suppose the plate to be divided lengthwise into flat strips an inch wide l inches long, and suppose that a fraction p' of the whole pressure causes the bending of these strips.

Regarding the strips as beams with fixed ends and uniformly loaded:

$$S=\frac{6M}{bh^2}=\frac{6Wl}{12bh^2}=\frac{p'l^2}{2t^2}$$

and the thickness necessary to resist bending is:

$$t=l\sqrt{\frac{p'}{2S}}. \qquad \text{(a)}$$

In a similar manner, if we suppose the plate to be divided into transverse strips an inch wide and b inches long, and suppose the remainder of the pressure $p-p'$ equals p'' to cause the bending in this direction, we shall have:

$$t=b\sqrt{\frac{p''}{2S}}. \qquad \text{(b)}$$

But as all these strips form one and the same plate the ratio of p' to p'' must be such that the deflection at the center of the plate may be the same on either supposition. The general formula for deflection in this case is

$$\Delta=\frac{Wl^3}{384\,EI}$$

and $I=\frac{t^3}{12}$ for each set of strips. Therefore the deflection is proportional to $\frac{p'l^4}{t^3}$ and $\frac{p''b^4}{t^3}$ in the two cases.

$$\therefore\ p'l^4=p''b^4$$

But $$p'+p''=p$$

Solving in these equations for p' and p''

$$p'=\frac{pb^4}{l^4+b^4}$$

$$p''=\frac{pl^4}{l^4+b^4}$$

Substituting these values in (a) and (b):

$$t=lb^2\sqrt{\frac{p}{2S(l^4+b^4)}}. \tag{32}$$

$$t=bl^2\sqrt{\frac{p}{2S(l^4+b^4)}}. \tag{33}$$

As $l>b$ usually, equation (33) is the one to be used. If the plate is square $l=b$ and

$$t=\frac{b}{2}\sqrt{\frac{p}{S}}. \tag{34}$$

If the plate is merely supported at the edges then formulas (32) and (33) become:
For rectangular plate:

$$t=\frac{bl^2}{2}\sqrt{\frac{3p}{S(l^4+b^4)}}. \tag{35}$$

For square plate:

$$t=\frac{b}{2}\sqrt{\frac{3p}{2S}}. \tag{36}$$

A round plate may be treated as square, with side = diameter, without sensible error.

The preceding formulas can only be regarded as approximate. Grashof has investigated this subject and developed rational formulas but his work is too long and complicated for introduction here. His formulas for round plates are as follows:

Round plates:
Supported at edges:

$$t=\frac{d}{2}\sqrt{\frac{5p}{6S}}. \tag{37}$$

Fixed at edges:

$$t=\frac{d}{2}\sqrt{\frac{2p}{3S}}. \tag{38}$$

where t and p are the same as before, d is the diameter in inches and S is the safe tensile strength of the material.

Comparing these formulas with (34) and (36) for square plates, they are seen to be nearly identical if allowance is made for the difference in the value of S.

Experiments made at the Case School of Applied Science in 1896–97 on rectangular cast-iron plates with load concentrated at the center gave results as follows: Twelve rectangular plates planed on one side and each having an unsupported area of 10 by 15 in. were broken by the application of a circular steel plunger 1 in. in diameter at the geometrical center of each plate. The plates varied in thickness from $\frac{1}{2}$ in. to $1\frac{1}{8}$ in. Numbers 1 to 6 were merely supported at the edges, while the remaining six were clamped rigidly at regular intervals around the edge.

To determine the value of S, the modulus of rupture of the material, pieces were cut from the edge of the plates and tested by cross-breaking. The average value of S from seven experiments was found to be 33,000 lb. per square inch.

In Table XXV are given the values obtained for the breaking load W under the different conditions.

If we assume an empirical formula:

$$W=k\,\frac{St^2}{l^2+b^2}. \tag{a}$$

and substitute given values of S, l and b we have nearly:

$$W=100kt^2. \tag{b}$$

Substituting values of W and t from the Table XXI we have the values of k as given in the last column.

If we average the values for the two classes of plates and substitute in (a) we get the following empirical formulas:

For breaking load on plates supported at the edges and loaded at the center:

$$W = 276 \frac{St^2}{l^2 + b^2} \tag{39}$$

and for similar plates with edges fixed:

$$W = 442 \frac{St^2}{l^2 + b^2} \tag{40}$$

S in both formulas is the modulus of rupture.

TABLE XXV

CAST-IRON PLATES 10×15 IN.

No.	Thickness t	Breaking load W	Constant k
1	.562	7,500	237
2	.641	11,840	288
3	.745	14,800	267
4	.828	21,900	320
5	1.040	31,200	289
6	1.120	31,800	254
7	.481	9,800	424
8	.646	17,650	422
9	.769	26,400	446
10	.881	33,400	430
11	1.020	47,200	454
12	1.123	59,600	477

Those plates which were merely supported at the edges broke in three or four straight lines radiating from the center. Those fixed at the edges broke in four or five radial lines meeting an irregular oval inscribed in the rectangle. Number 12, however, failed by shearing, the circular plunger making a circular hole in the plate with several radial cracks.

Some tests were made in the spring of 1906 at the Case School laboratories by Messrs. Hill and Nadig on the strength of flat cast-iron plates under uniform hydraulic pressure.

Table XXVI gives the results of the investigation.

The low value of S is explained by the fact that the material was a soft rather coarse gray iron, having an average tensile strength of about 12,000 lb.

TABLE XXVI

CAST-IRON PLATES, UNIFORM LOAD, FIXED EDGES

Size of plate, inches	Thickness Inches	Modulus S	Breaking load in pounds per square inch	
			By formula	Actual
12×12	0.75	20,440	(34) 320	375
12×12	1.00	27,900	(34) 777	675
12×18	0.94	26,600	(33) 390	450
12×18	1.25	24,000	(33) 622	650

Further experiments are needed to establish any general conclusions.

32. Steel Plates.—Mr. T. A. Bryson of Rensselaer Polytechnic Institute has recently made some tests on steel plates under hydrostatic pressure and published a monograph on the subject.

The material tested was medium steel boiler plate from $\frac{1}{8}$ to $\frac{1}{2}$ in. thick and the sizes used were 18 by 18 in. and 24 by 24 in.

Two plates separated by a cast-iron distance piece were clamped at the edges by cast-iron frames bolted together. Hydrostatic pressures from 0 to 225 lb. per square inch were applied and deflections were measured at five points. Both working deflections and permanent sets were noted. The characteristics of the material were determined from test pieces cut off the edge of each plate.

Mr. Bryson develops formulas similar to Morley's,[1] which differ from those just given in the values of the constants. All the formulas for square plates can, however, be reduced to the general form:

$$t = b\sqrt{\frac{kp}{S}} \text{ (See formula 34)}$$

or

$$S = k\frac{b^2p}{t^2} \tag{41}$$

where S is the maximum stress in the plate.

The value of k, as determined by the average of eight tests

[1] Morley's Strength of Materials.

with different values of b and t, was 0.141 at the elastic limit of the material, the maximum value being 0.156 and the minimum 0.131.

This value of k may then be used for steel plates with fixed edges without serious error. Mr. Bryson after discussing the experiments of Bach on square and rectangular plates recommends the following general formula for rectangular steel plates fixed at the edges and uniformly loaded:

$$S=\frac{0.5}{1+2.55r}\cdot\frac{b^2p}{t^2} \tag{42}$$

where

$$r=b/l$$

Where $l=b$ this reduces to formula (41).

The value of S for plates merely supported may be assumed to be 50 per cent greater than in formula (42).

The value of k in formula (32) is determined by substituting $r=\frac{b}{l}$ and reducing:

$$S=\frac{r^2}{2(1+r^4)}\cdot\frac{b^2p}{t^2} \tag{43}$$

$$i.e.,\ k=\frac{r^2}{2(1+r^4)}$$

or for a square plate:

$$S=\frac{1}{4}\frac{b^2p}{t^2} \tag{44}$$

These values of k are much larger than those just given. In Mr. Bryson's tests it was found that suspension stresses gradually supplanted those due to bending and that this change reduced the value of k.

This would not be true of cast-iron plates and the formulas given on page 84 would be preferable.

The values of k for the four experiments detailed in Table XXVI would be respectively:

$$k=.213–.287–.363–.400$$

which shows that formula (42) is not applicable to cast-iron plates.

The most comprehensive experiments on flat plates are those by Professor Bach, and Grashof's formulas are largely controlled

by them.[1] Table XXVII gives the derived formulas for some of the more usual cases. The notation is the same as that of the previous formulas.

The strength of the plates depends also on the manner of fastening at the edges, the number and size of bolts, the nature of gasket used, if any, etc., etc.

TABLE XXVII

STRESSES IN FLAT PLATES

Shape	Edges	Load	Value of fiber stress $S=$	Value of coefficient $k=$	Remarks
Circle.....	Fixed.....	Uniform....	$k\frac{pr^2}{t^2}$	Cast iron, 0.8..... Steel, 0.5.....	r=radius.
Circle.....	Support...	Uniform....	$k\frac{pr^2}{t^2}$	Cast iron, 1.2..... Steel, 0.7.....	r=radius.
Ellipse....	Fixed.....	Uniform....	$k\frac{pb^2}{4t^2(l+n^2)}$ [1]	Cast iron, 1.34..... Steel, 0.84.....	Estimated.
Ellipse....	Support...	Uniform....	$k\frac{pb^2}{4t^2(l+n^2)}$ [1]	Cast iron, 2.26..... Steel, 1.41.....	Estimated.
Rect.....	Fixed.....	At center...	$k\frac{Wlb}{t^2(l^2+b^2)}$	Cast iron, 2.63.....	.....
Rect.....	Support...	At center...	$k\frac{Wlb}{t^2(l^2+b^2)}$	Cast iron, 3.0.....	.....
Rect.....	Fixed.....	Uniform....	$k\frac{pl^2b^2}{t^2(l^2+b^2)}$	Cast iron, 0.38..... Steel, 0.24.....	Estimated.
Rect.....	Support...	Uniform....	$k\frac{pl^2b^2}{t^2(l^2+b^2)}$	Cast iron, 0.57..... Steel, 0.36.....	Estimated.
Square....	Fixed.....	At center...	$k\frac{W}{t^2}$	Cast iron, 1.32.....	.....
Square....	Support...	At center...	$k\frac{W}{t^2}$	Cast iron, 1.50.....	.....
Square....	Fixed.....	Uniform....	$k\frac{pb^2}{t}$	Cast iron, 0.19..... Steel, 0.12.....	Estimated.
Square....	Support...	Uniform....	$k\frac{pb^2}{t}$	Cast iron, 0.28..... Steel, 0.18.....	Estimated.

NOTE.—$n=\frac{\text{minor axis}}{\text{major axis}}$

[1] See *Am. Mach.*, Nov. 25, 1909.

It will be interesting to compare values of S in Table XXVII with those obtained by experiment so as to determine whether S corresponds to the tensile strength of the metal or to the modulus of rupture in cross breaking.

PROBLEMS

1. Calculate the thickness of a steam-chest cover 12×16 in. to sustain a pressure of 90 lb. per square inch with a factor of safety $= 10$.

2. Calculate the thickness of a circular manhole cover of cast iron 18 in. in diameter to sustain a pressure of 200 lb. per square inch with a factor of safety $= 8$, regarding the edges as merely supported.

3. Determine the probable breaking load for a plate 18×24 in. loaded at the center, (*a*) when edges are fixed. (*b*) When edges are supported.

4. In experiments on steam cylinders, a head 12 in. in diameter and 1.18 in. thick failed under a pressure of 900 lb. per square inch. Determine the value of S by formula (34).

REFERENCES

Mechanics of Materials, Merriman, Chapter XIV.
Strength of Materials, Slocum and Hancock, Chapters VII and VIII.
Details of High-pressure Piping. *Cass.* June, 1906.
Design and Construction of Piping. *Eng. Mag.*, April, 1908.
Piping for High Pressures. *Power*, Sept. 22, 1908.
Flanges for High Pressures. *Power*, July, 1905; Dec., 1905.
High-pressure Tests of Large Pipes. *Eng. News*, Apr. 15, 1909.

CHAPTER IV

FASTENINGS

33. Bolts and Nuts.—Tables of dimensions for U. S. standard bolt heads and nuts are to be found in most engineering handbooks and will not be repeated here.

These proportions have not been generally adopted on account of the odd sizes of bar required. The standard screw-thread has been quite generally accepted as superior to the old V-thread.

Roughly the diameter at root of thread is 0.83 of the outer diameter in this system, and the pitch in inches is given by the formula

$$p = .24\sqrt{d + .625} - .175 \tag{45}$$

where d = outer diameter.

TABLE XXVIII

SAFE WORKING STRENGTH OF IRON OR STEEL BOLTS

Diam. of bolt, inch	Threads per inch, No.	Diam. at root of thread, inches	Area at root of thread, sq. in.	Safe load in tension, pounds		Safe load in shear, pounds	
				5,000 lb. per sq. in.	7,500 lb. per sq. in.	4,000 lb. per sq. in.	6,000 lb. per sq. in.
$\frac{1}{4}$	20	.185	.0269	135	202	196	294
$\frac{5}{16}$	18	.240	.0452	226	340	306	. 460
$\frac{3}{8}$	16	.294	.0679	340	510	440	660
$\frac{7}{16}$	14	.344	.0930	465	695	600	900
$\frac{1}{2}$	13	.400	.1257	628	940	785	1,175

TABLE XXVIII (*Continued*)

SAFE WORKING STRENGTH OF IRON OR STEEL BOLTS

Diam. of bolt, inch	Threads per inch, No.	Diam at root of thread, inches	Area at root of thread, sq. in.	Safe load in tension, pounds		Safe load in shear, pounds	
				5,000 lb. per sq. in.	7,500 lb. per sq. in.	4,000 lb. per sq. in.	6,000 lb. per sq. in.
5/16	12	.454	.162	810	1,210	990	1,485
3/8	11	.507	.202	1,010	1,510	1,230	1,845
7/16	10	.620	.302	1,510	2,260	1,770	2,650
1/2	9	.731	.420	2,100	3,150	2,400	3,600
1	8	.837	.550	2,750	4,120	3,140	4,700
1 1/8	7	.940	.694	3,470	5,200	3,990	6,000
1 1/4	7	1.065	.891	4,450	6,680	4,910	7,360
1 3/8	6	1.160	1.057	5,280	7,920	5,920	7,880
1 1/2	6	1.284	1.295	6,475	9,710	7,070	10,600
1 5/8	5 1/2	1.389	1.515	7,575	11,350	8,250	12,375
1 3/4	5	1.490	1.744	8,720	13,100	9,630	14,400
1 7/8	5	1.615	2.049	10,250	15,400	11,000	16,500
2	4 1/2	1.712	2.302	11,510	17,250	12,550	18,800

The shearing load is calculated from the area of the body of the bolt.

Bolts may be divided into three classes which are given in the order of their merit.

1. Through bolts, having a head on one end and a nut on the other.

2. Stud bolts, having a nut on one end and the other screwed into the casting.

3. Tap bolts or screws having a head at one end and the other screwed into the casting.

The principal objection to the last two forms and especially to (3) is the liability of sticking or breaking off in the casting.

Any irregularity in the bearing surfaces of head or nut where they come in contact with the casting, causes a bending action and consequent danger of rupture.

This is best avoided by having a slight annular projection on the casting concentric with the bolt hole and finishing the flat surface by planing or counter-boring.

Counter-boring without the projection is a rather slovenly way of over coming the difficulty.

When bolts or studs are subjected to severe stress and vibration, it is well to turn down the body of the bolt to the diameter at root of thread, as the whole bolt will then stretch slightly under the load.

A check nut is a thin nut screwed firmly against the main nut to prevent its working loose, and is commonly placed outside.

As the whole load is liable to come on the outer nut, it would be more correct to put the main nut outside. (Prove this by figure.)

After both nuts are firmly screwed down, the outer one should be held stationary and the inner one reversed against it with what force is deemed safe, that the greater reaction may be between the nuts.

Numerous devices have been invented for the purpose of holding nuts from working loose under vibration but none of them are entirely satisfactory.

Probably the best method for large nuts is to drive a pin or cotter entirely through nut and bolt.

A flat plate, cut out to embrace the nut and fastened to the casting by a machine screw, is often used.

Machine Screws.—A screw is distinguished from a bolt by having a slotted, round head instead of a square or hexagon head.

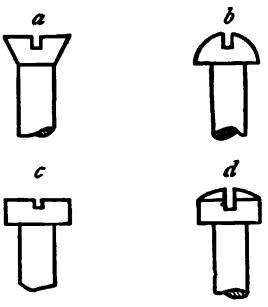

FIG. 26.

The head may have any one of four shapes, the round, fillister, oval fillister and flat as shown in Fig. 26. A committee of the American Society of Mechanical Engineers has recently recommended certain standards for machine screws. The form of thread recommended is the U. S. Standard or Sellers type with provision for clearance at top and bottom to insure bearing on the body of the thread.

The sizes and pitches recommended are shown in Table XXIX.

In designing eye-bolts it is customary to make the combined sectional area of the sides of the eye one and one-half-times that of the bolt to allow for obliquity and an uneven distribution of stress.

TABLE XXIX

MACHINE SCREWS

Standard diam.	.070	.085	.100	.110	.125	.140	.165	.190	.215	.240	.250	.270	.320	.375
Threads per in.	72	64	56	48	44	40	36	32	28	24	24	22	20	16

Reference is made to the report itself for further details of heads, taps, etc.

34. Crane Hooks.—Heretofore, the large wrought-iron or steel hooks used for crane service have usually been designed by considering the fibers on the inside of a hook to be subjected to a tension which was the resultant of the direct load and of the bending due to the eccentricity of the loading.

Experiments made by Professor Rautenstrauch in 1909[1] show that such methods do not give correct results. Ten hooks of various capacities were tested by direct loading and their elastic limits determined.

The following table gives the leading data and results. The dimensions are those of the principal cross-section:

TABLE XXX

ELASTIC LIMIT OF CRANE HOOKS

Nominal capacity, tons	Material	Cross-section dimensions				Elastic limit, lb.
		A	I	l	y	
30	C. steel...	23.35	111.6	7.25	3.36	56,000
20	C. steel...	14.48	.....	5.90	2.75	30,000
15	C. steel...	13.92	.....	5.13	2.23	48,000
15	W. iron...	8.40	11.9	5.00	1.87	16,000
10	C. steel...	8.72	.....	4.30	2.05	18,000
10	W. iron...	6.08	6.5	4.00	1.50	16,000
5	C. steel...	5.69	.....	3.25	1.42	18,000
5	W. iron...	4.80	3.8	3.47	1.35	14,000
3	C. steel...	3.50	.....	2.89	1.16	8,500
2	C. steel...	2.03	.....	2.03	0.88	4,700

[1] Am. Mach., Oct. 7, 1909.

A = area in square inches
I = moment of inertia about gravity axis
l = distance from load line to gravity axis
y = distance from inner fiber to gravity axis.

It will be noticed that the nominal capacity of the hook is in several cases greater than the elastic limit as shown by experiment. This is particularly true of the larger sizes.

The standard cross-section of crane hooks is that of a trapezoid with curved bases as shown in Fig. 27. The wider base corresponds to the inner side of the hook where the tension is greatest.

The dimensions given are approximately those of a 20-ton steel hook. Professor Rautenstrauch finds that the values of the load at elastic limit, as determined by the ordinary formula above alluded to, are entirely erroneous, being in many cases more than twice that found by the actual tests. He recommends instead the so-called Andrews-Pearson formula which takes into account the curvature of the neutral axis and the lateral distortion of the metal.

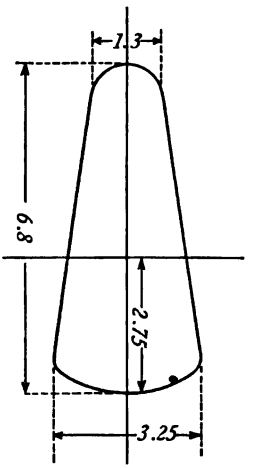

FIG. 27.—20-ton steel hook.

The discussion is too long for reproduction here and reference is made to his paper and to the original presentation of this formula.[1]

A similar condition exists in large chain links. The bending moment in this case is, however, usually eliminated by the insertion of a cross piece or strut.[2]

PROBLEMS

1. Discuss the effect of the initial tension caused by the screwing up of the nut on the bolt, in the case of steam fittings, etc.; *i.e.*, should this tension be added to the tension due to the steam pressure, in determining the proper size of bolt?

[1] Technical Series 1, Draper Company's Research Memoirs, 1904. See also Slocum and Hancock's Strength of Materials.

[2] See Univ. of Illinois, Bulletin No. 18. "The Strength of Chain Links," by G. A. Goodenough and L. E. Moore.

2. Determine the number of $\frac{7}{8}$-in. steel bolts necessary to hold on the head of a steam cylinder 18 in. diameter, with the internal pressure 90 lb. per square inch, and factor of safety = 12.

3. Show what is the proper angle between the handle and the jaws of a fork wrench.

(1) If used for square nuts.

(2) If used for hexagon nuts; illustrate by figure.

4. Determine the length of nut theoretically necessary to prevent stripping of the thread, in terms of the outer diameter of the bolt.

(1) With U. S. standard thread.

(2) With square thread of same depth.

5. Design a hook with a swivel and eye at the top to hold a load of 10 tons with a factor of safety 5, the center line of hook being 8 in. from line of load, and the material soft steel.

35. Riveted Joints.—Riveted joints may be divided into two general classes: lap joints where the two plates lap over each other, and butt joints where the edges of the plates butt together and are joined by over-lapping straps or welts. If the strap is on one side only, the joint is known as a butt joint with one strap: if straps are used inside and out the joint is called a butt joint with two straps. Butt joints are generally used when the material is more than $\frac{1}{2}$ in. thick.

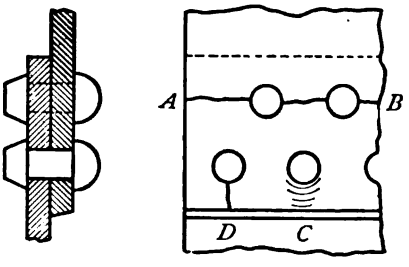

FIG. 28.

Any joint may have one, two or more rows of rivets and hence be known as a single riveted joint, a double riveted joint, etc.

Any riveted joint is weaker than the original plate, simply because holes cannot be punched or drilled in the plate for the introduction of rivets without removing some of the metal.

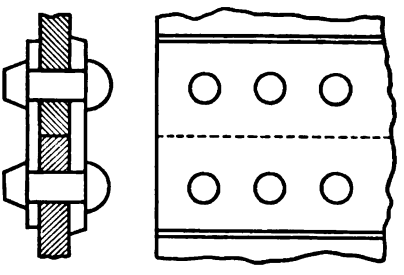
FIG. 29.

Fig. 28 shows a double riveted lap joint and Fig. 29 a single riveted butt joint with two straps.

Riveted joints may fail in any one of four ways:

1. By tearing of the plate along a line of rivet holes, as at AB, Fig. 28.

2. By shearing of the rivets.

3. By crushing and wrinkling of the plate in front of each rivet as at C, Fig. 28, thus causing leakage.

4. By splitting of the plate opposite each rivet as at D, Fig. 28.

The last manner of failure may be prevented by having a sufficient distance from the rivet to the edge of the plate. Practice has shown that this distance should be at least equal to the diameter of a rivet.

Experience has shown that lap joints in plates of even moderate thickness are dangerous on account of the liability of hidden cracks. Several disastrous boiler explosions have resulted from the presence of cracks inside the joint which could not be detected by inspection. The fact that one or both plates are out of the line of pull brings a bending moment on both plates and rivets.

Some boiler inspectors have gone so far as to condemn lap joints altogether.

Let t = thickness of plate
d = diameter of rivet hole
p = pitch of rivets
n = number of rows of rivets
T = tensile strength of plate
C = crushing strength of plate or rivet
S = shearing strength of rivet.

Average values of the constants are as follows:

Material	T	C	S
Wrought iron.....	50,000	80,000	40,000
Soft steel.....	56,000	90,000	45,000

The values of the constants given above are only average values and are liable to be modified by the exact grade of material used and the manner in which it is used.

The tensile strength of soft steel is reduced by punching from

3 to 12 per cent according to the kind of punch used and the width of pitch. The shearing strength of the rivets is diminished by their tendency to tip over or bend if they do not fill the holes, while the bearing or compression is doubtless relieved to some extent by the friction of the joint. The values given allow roughly for these modifications.

36. Lap Joints.—This division also includes butt joints which have but one strap.

Let us consider the shell as divided into strips at right angles to the seam and each of a width $=p$. Then the forces acting on each strip are the same and we need to consider but one strip.

The resistance to tearing across of the strip between rivet holes is

$$(p-d)tT \tag{a}$$

and this is independent of the number of rows of rivets.

The resistance to compression in front of rivets is

$$ndtC \tag{b}$$

and the resistance to shearing of the rivets is

$$\frac{\pi}{4}nd^2S. \tag{c}$$

If we call the tensile strength $T=$unity then the relative values of C and S are 1.6 and 0.8 respectively.

Substituting these relative values of T, C and S in our equations, by equating (b) and (c) and reducing we have

$$d=2.55t \tag{46}$$

Equating (a) and (c) and reducing we have

$$p=d+.628\frac{nd^2}{t} \tag{47}$$

Or by equating (a) and (b)

$$p=d+1.6nd \tag{48}$$

These proportions will give a joint of equal strength throughout, for the values of constants assumed.

37. Butt Joints with Two Straps.—In this case the resistance to shearing is increased by the fact that the rivets must be sheared

at both ends before the joint will fail. Experiment has shown this increase of shearing strength to be about 85 per cent and we can therefore take the relative value of S as 1.5 for butt joints.

This gives the following values for d and p

$$d = 1.36t \tag{49}$$

$$p = d + 1.18\,\frac{nd^2}{t} \tag{50}$$

$$p = d + 1.6nd. \tag{51}$$

In the preceding formulas the diameter of hole and rivet have been assumed to be the same.

The diameter of the cold rivet before insertion will be $\frac{1}{16}$ in. less than the diameter given by the formulas.

Experiments made in England by Prof. Kennedy give the following as the proportions of maximum strength:

Lap joints	$d = 2.33t$
	$p = d + 1.375nd$
Butt joints	$d = 1.8t$
	$p = d + 1.55nd$

38. Efficiency of Joints.—The efficiency of joints designed like the preceding is simply the ratio of the section of plate left between the rivets to the section of solid plate, or the ratio of the clear distance between two adjacent rivet holes to the pitch. From formula (48) we thus have:

$$\text{Efficiency} = \frac{1.6n}{1 + 1.6n}. \tag{52}$$

This gives the efficiency of single, double and triple riveted seams as

.615, .762 and .828 respectively.

Notice that the advantage of a double or triple riveted seam over the single is in the fact that the pitch bears a greater ratio to the diameter of a rivet, and therefore the proportion of metal removed is less.

39. Butt Joints with Unequal Straps.—One joint in common use requires special treatment.

It is a double riveted butt joint in which the inner strap is made wider than the outer and an extra row of rivets added, whose pitch is double that of the original seam; this is sometimes called diamond riveting. See Fig. 30.

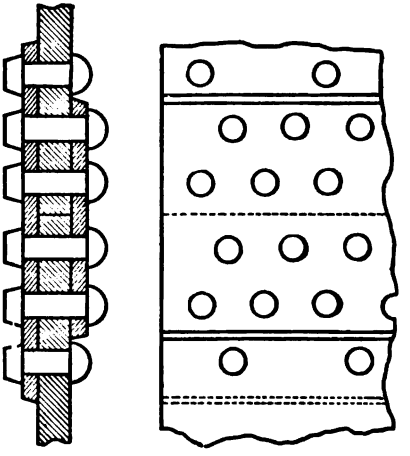

FIG. 30.

This outer row of rivets is then exposed to single shear and the original rows to double shear.

Consider a strip of plate of a width $=2p$. Then the resistance to tearing along the outer row of rivets is

$$(2p-d)tT$$

As there are five rivets to compress in this strip the bearing resistance is

$$5dtC$$

As there is one rivet in single shear and four in double shear the resistance to shearing is

$$\left\{1+(4\times1.85)\right\}\frac{\pi}{4}d^2S=6.6d^2S$$

Solving these equations as in previous cases, we have for this particular joint

$$d=1.52t \tag{53}$$

$$2p=9d$$

$$p=4.5d \tag{54}$$

$$\text{Efficiency}=\frac{2p-d}{2p}=\frac{8}{9}. \tag{55}$$

40. Practical Rules.—The formulas given above show the proportions of the usual forms of joints for uniform strength.

In practice certain modifications are made for economic reasons. To avoid great variation in the sizes of rivets the latter are graded by sixteenths of an inch, making those for the thicker plates con-

siderably smaller than the formula would allow, and the pitch is then calculated to give equal tearing and shearing strength.

Table XXXI shows what may be considered average practice in this country for lap joints with steel plates and rivets.

TABLE XXXI

RIVETED LAP JOINTS

Thickness of plate	Diam. of rivet	Diam. of hole	Pitch		Efficiency of plate	
			Single	Double	Single	Double
$\frac{1}{4}$	$\frac{1}{2}$	$\frac{9}{16}$	$1\frac{3}{8}$	$1\frac{3}{4}$	.59	.68
$\frac{5}{16}$	$\frac{5}{8}$	$\frac{11}{16}$	$1\frac{5}{8}$	$2\frac{1}{8}$	.58	.68
$\frac{3}{8}$	$\frac{3}{4}$	$\frac{13}{16}$	$1\frac{7}{8}$	$2\frac{1}{2}$	.57	.67
$\frac{7}{16}$	$\frac{13}{16}$	$\frac{7}{8}$	2	$2\frac{3}{4}$	.56	.68
$\frac{1}{2}$	$\frac{7}{8}$	$\frac{15}{16}$	2	$2\frac{7}{8}$	.53	.67

The efficiencies are calculated from the strength of plate between rivet holes and the efficiencies of the rivets may be even lower. Comparing these values with the ones given in Art. 38 we find them low. This is due to the fact that the pitches assumed are too small. The only excuse for this is the possibility of getting a tighter joint.

TABLE XXXII

RIVETED BUTT JOINTS

Thickness of plate	Diam. of rivet	Diam. of hole	Pitch		
			Single	Double	Triple
$\frac{1}{2}$	$\frac{3}{4}$	$\frac{13}{16}$	$2\frac{3}{8}$	4	$5\frac{1}{2}$
$\frac{5}{8}$	$\frac{13}{16}$	$\frac{7}{8}$	$2\frac{3}{8}$	$3\frac{3}{4}$	$5\frac{1}{4}$
$\frac{3}{4}$	$\frac{7}{8}$	$\frac{15}{16}$	$2\frac{3}{8}$	$3\frac{3}{4}$	$5\frac{1}{8}$
$\frac{7}{8}$	$\frac{15}{16}$	1	$2\frac{3}{8}$	$3\frac{3}{4}$	5
1	1	$1\frac{1}{16}$	$2\frac{3}{8}$	$3\frac{3}{4}$	5

Table XXXII has been calculated for butt joints with two straps. As in the preceding table the values of the pitch are too small for the best efficiency. The tables are only intended to illustrate common practice and not to serve as standards. There is such a diversity of practice among manufacturers that it is advisable for the designer to proportion each joint according to his own judgment, using the rules of Arts. 36–39 and having regard to the practical considerations which have been mentioned.

A committee of the Master Steam Boiler Makers' Association has made a number of tests on riveted joints and reported its conclusions. The specimens were prepared according to generally accepted practice, but on subjecting them to tension many of them failed by tearing through from hole to edge of plate. The committee recommends making this distance greater, so that from the center of hole to edge of plate shall be perhaps $2d$ instead of $1.5d$.

The committee further found the shearing strength of rivets to be in pounds per square inch of section.

	Single shear	Double shear
Iron rivets	40,000	78,000
Steel rivets	49,000	84,000

Compare these values with those given in Art. 35. Also note that the factor for double shear is 1.95 for iron rivets and only 1.71 for steel rivets as against the 1.85 given in Art. 37. The committee found that machine-driven rivets were stronger in double shear than hand-driven ones.

PROBLEMS

1. Calculate diameter and pitch of rivets for $\frac{1}{4}$-in. and $\frac{1}{2}$-in. plate and compare results with those in Table XXXI. Criticise latter.

2. Show the effect in Prob. 1 of using iron rivets in steel plates.

3. Criticise proportions of joints for $\frac{1}{2}$-in. and 1-in. plate in Table XXXII by testing the efficiency of rivets and plates.

4. A cylinder boiler 5×16 ft. is to have long seams double riveted laps and ring seams single riveted laps. If the internal pressure is 90 lb. gage pressure and the material soft steel, determine thickness of plate and proportion of joints. The net factor of safety at joints to be 5.

5. A marine boiler is 13 ft. 6 in. in diameter and 14 ft. long. The long seams are to be diamond riveted butt joints and the ring seams ordinary double riveted butt joints. The internal pressure is to be 175 lb. gage and the material is to be steel of 60,000 lb. tensile strength. Determine thickness of shell and proportions of joints. Net factor of safety to be 5, as in Prob. 4.

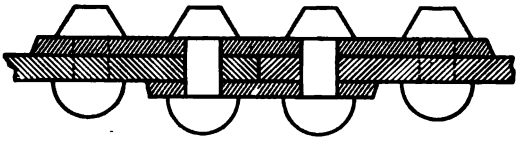

FIG. 31.

6. Design a diamond riveted joint such as shown in Fig. 31 for a steel plate $\frac{5}{8}$ in. thick. Outer cover plate is $\frac{5}{8}$ in. and inner cover plate is $\frac{7}{16}$ in. thick; the pitch of outer rows of rivets to be twice that of inner rows. Determine efficiency of joints.

7. The single lap joint with cover plate, as shown in Fig. 32, is to have pitch of outer rivets double that of inner row. Determine diameter and pitch of rivets for $\frac{1}{2}$-in. plate and the efficiency of joint.

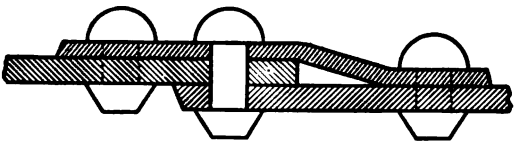

FIG. 32.

41. Riveted Joints for Narrow Plates.—The joints which have been so far described are continuous and but one strip of a width equal to the pitch or the least common multiple of several pitches, has been investigated.

When narrow plates such as are used in structural work are to be joined by rivets, the joint is designed as a whole. Diamond riveting similar to that shown in Fig. 30 is generally used and the joint may be a lap, or a butt with double straps. The diameter of rivets may be taken about 1.5 times the thickness of plate [see equation (53)], and enough rivets used so that the total shearing strength may equal the tensile strength of the plate at the point of the diamond, where there is one rivet hole. It may be necessary to put in more rivets of a less diameter in order to make the figure symmetrical.

The efficiency of the joint may be tested at the different rows of rivets, allowing for tension of plate and shear of rivets in each case.

PROBLEMS

1. Design a diamond riveted lap joint for a plate 12 in. wide and $\frac{5}{8}$ in. thick, and calculate least efficiency for shear and tension.

2. A diamond riveted butt joint with two straps has rivets arranged as in Fig. 33, the plate being 12 in. wide and $\frac{3}{4}$ in. thick, and the rivets being 1 in. in diameter. If the plate and rivets are of steel, find the probable ultimate strength of the following parts:

(*a*) The whole plate.
(*b*) All the rivets on one side of the joint.
(*c*) The joint at the point of the diamond.
(*d*) The joint at the row of rivets next the point.

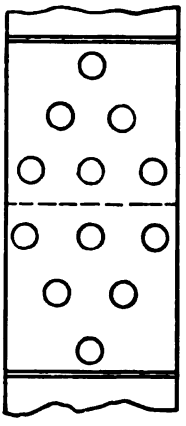

FIG. 33.

42. Joint Pins.—A joint pin is a bolt exposed to double shear. If the pin is loose in its bearings it should be designed with allowance for bending, by adding from 30 to 50 per cent to the area of cross-section needed to resist shearing alone. Bending of the pin also tends to spread apart the bearings and this should be prevented by having a head and nut or cotter on the pin.

If the pin is used to connect a knuckle joint as in boiler stays, the eyes forming the joint should have a net area 50 per cent in excess of the body of the stay, to allow for bending and uneven tension (see Eye-bolts, Art. 33).

Fig. 34 shows a pin and angle joint for attaching the end of a boiler stay to the head of the boiler.

43. Cotters.—A cotter is a key which passes diametrically through a hub and its rod or shaft, to fasten them together, and is so called to distinguish it from shafting keys which lie parallel to axis of shaft.

Its taper should not be more than 4 degrees or about 1 in 15, unless it is secured by a screw or check nut.

The rod is sometimes enlarged where it goes in the hub, so that the effective area of cross-section where the cotter goes through may be the same as in the body of the rod. (See Fig. 35.)

Let: d = diameter of body of rod
d_1 = diameter of enlarged portion
t = thickness of cotter, usually $= \frac{d_1}{4}$
b = breadth of cotter
l = length of rod beyond cotter.

Suppose that the applied force is a pull on the rod—causing tension on the rod and shearing stress on the cotter.

The effective area of cross-section of rod at cotter is

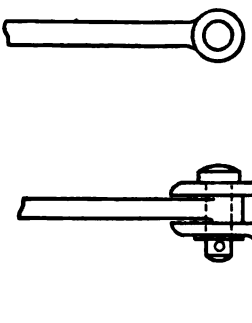

FIG. 34.

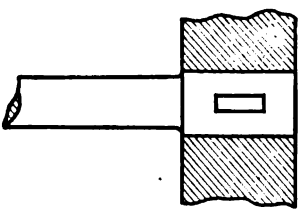

FIG. 35.

$$\frac{\pi d_1^2}{4} - \frac{d_1^2}{4} = (\pi - 1)\frac{d_1^2}{4}$$

and this should equal the area of cross-section of the body of rod.

$$(\pi - 1)\frac{d_1^2}{4} = \frac{\pi d^2}{4}$$

$$d_1 = d\sqrt{\frac{\pi}{\pi - 1}} = 1.21d. \qquad (56)$$

Let P = pull on rod.
S = shearing strength of material.

The area to resist shearing of cotter is

$$2bt = \frac{bd_1}{2} = \frac{P}{S}$$

$$\therefore b = \frac{2P}{d_1 S}. \qquad (a)$$

The area to resist shearing of rod is

$$2d_1 l = \frac{P}{S}$$

$$\text{and } l = \frac{P}{2d_1S}. \tag{b}$$

If the metal of rod and cotter are the same

$$2d_1l = \frac{bd_1}{2}$$

$$l = \frac{b}{4}. \tag{57}$$

Great care should be taken in fitting cotters that they may not bear on corners of hole and thus tear the rod in two.

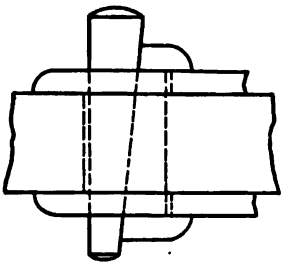

FIG. 36.

A cotter or pin subjected to alternate stresses in opposite directions should have a factor of safety double that otherwise allowed.

Adjustable cotters, used for tightening joints of bearings are usually accompanied by a gib having a taper equal and opposite to that of the cotter (Fig. 36). In designing these for strength the two can be regarded as resisting shear together.

For shafting keys see chapter on shafting.

The split pin is in the nature of a cotter but is not usually expected to take any shearing stress.

PROBLEMS

1. Design an angle joint for a soft steel boiler stay, the pull on stay being 12,000 lb. and the factor of safety, 6. Use two standard angles.

2. Determine the diameter of a round cotter pin for equal strength of rod and pin.

3. A rod of wrought iron has keyed to it a piston 24 in. in diameter, by a cotter of machinery steel.

Required the two diameters of rod and dimensions of cotter to sustain a pressure of 150 lb. per square inch on the piston. Factor of safety = 8.

4. Design a cotter and gib for connecting rod of engine mentioned in Prob. 3, both to be of machinery steel and .75 in. thick. (See Fig. 36.)

REFERENCES

Machine Design. *Unwin.*, Vol. I, Chapters IV and V.

Failures of Lap Joints. *Power*, May, 1905; Feb., 1907; Nov., 1907.

Tests of Nickel Steel Riveted Joints. By A. N. Talbot and H. F. Moore. *University of Illinois Bulletin*, No. 49.

CHAPTER V

SPRINGS

44. Helical Springs.—The most common form of spring used in machinery is the spiral or helical spring made of round brass or steel wire. Such springs may be used to resist extension or compression or they may be used to resist a twisting moment.

Tension and Compression

Let L = length of axis of spring
D = mean diameter of spring
l = developed length of wire
d = diameter of wire
R = ratio $\frac{D}{d}$
n = number of coils
P = tensile or compressive force
x = corresponding extension or compression
S = safe torsional or shearing strength of wire
= 45,000 to 60,000 for spring brass wire
= 75,000 to 115,000 for cast steel, tempered
G = modulus of torsional elasticity
= 6,000,000 for spring brass wire
= 12,000,000 to 15,000,000 for cast steel, tempered.

Then
$$l=\sqrt{\pi^2D^2n^2+L^2}$$

If the spring were extended until the wire became straight it would then be twisted n times, or through an angle $=2\pi n$ and the stretch would be $l-L$.

The angle of torsion for a stretch $=x$ is then

$$\theta=\frac{2\pi nx}{l-L} \qquad \text{(a)}$$

Suppose that a force P' acting at a radius $\frac{D}{2}$ will twist this

same piece of wire through an angle θ causing a stress S at the surface of the wire. Then will the distortion of the surface of the wire per inch of length be $s=\frac{\theta d}{2l}$ and the stress

$$S=\frac{5.1T}{d^3}=\frac{5.1P'D}{2d^3} \tag{b}$$

$$\therefore G=\frac{S}{s}=\frac{10.2P'Dl}{2d^4\theta} \tag{c}$$

In thus twisting the wire the force required will vary uniformly from o at the beginning to P' at the end provided the elastic limit is not passed, and the average force will be

$=\frac{P'}{2}$ The work done is therefore $\frac{P'D\theta}{4}$

If the wire is twisted through the same angle by the gradual application of the direct pressure P, compressing or extending the spring the amount x, the work done will be

$\frac{Px}{2}$ But $\frac{P'D\theta}{4}=\frac{Px}{2}$

$$\therefore P'=\frac{2Px}{D\theta} \tag{d}$$

Substituting this value of P' in (c) and solving for x:

$$x=\frac{Gd^4\theta^2}{10.2Pl}$$

Substituting the value of θ from (a) and again solving for x:

$$x=\frac{10.2Pl}{Gd^4}\left\{\frac{l-L}{2\pi n}\right\}^2 \tag{e}$$

If we neglect the original obliquity of the wire then $l=\pi Dn$ and $L=o$ and equation (e) reduces to

$$x=\frac{2.55PlD^2}{Gd^4} \tag{58}$$

Making the same approximation in equation (d) we have

$$P'=P$$

i.e.—a force P will twist the wire through approximately the same angle when applied to extend or compress the spring, as if

applied directly to twist a piece of straight wire of the same material with a lever arm $=\frac{D}{2}$

This may be easily shown by a model.

The safe working load may be found by solving for P' in (b) and remembering that $P=P'$

$$P=\frac{Sd^3}{2.55D}=\frac{Sd^2}{2.55R} \tag{59}$$

when S is the safe shearing strength.

Substituting this value of P in (58) we have for the safe deflection:

$$x=\frac{lDS}{Gd}=\frac{lRS}{G} \tag{60}$$

45. Square Wire.—The value of the stress for a square section is:

$$S=\frac{4.24T}{d^3}$$

where d is the side of square.

The distortion at the corners caused by twisting through an angle θ is:

$$s=\frac{\theta d}{l\sqrt{2}}$$

Equation (c) then becomes:

$$G=\frac{6P'Dl}{2d^4\theta}$$

The three principal equations (58), (59) and (60) then reduce to:

$$x=\frac{1.5PlD^2}{Gd^4} \tag{61}$$

$$P=\frac{Sd^3}{2.12D} \tag{62}$$

$$x=\frac{lDS}{Gd\sqrt{2}} \tag{63}$$

The square section is not so economical of material as the round.

46. Experiments.—Tests made on about 1700 tempered steel springs at the French Spring Works in Pittsburg were reported in 1901 by Mr. R. A. French.[1] These were all compression springs

[1] Trans. A. S. M. E., Vol. XXIII.

of round steel and were given a permanent set before testing by being closed coil to coil several times. Table XXXIII gives results of these experiments.

TABLE XXXIII

Group.	Number of Springs.	Outside Diameter.	Mean Diameter.	Diameter of Bar.	Ratio $-\frac{D}{d}$	Length of Bar.	Height before Closing.	Height after Closing.	Permanent Set $= H - H'$.	Height when Closed.	Total Action $= H' - H''$.	Ratio $-\frac{S}{x}$.	Load to Close Spring.	Coefficient of Torsional Elasticity.	Torsional or Shearing Stress.
	N	O	D	d	R	L	H	H'	S	H''	x	Y	P	G	S
1	15	9.25	7.9375	1.3125	6.05	150	17.25	15.25	2	8.8175	6.432	.311	10,900	12,500,000	97,500
2	20	6.625	5.375	1.25	4.3	80	7.125	7	.125	5.9375	1.062	.117	6,375	14,400,000	44,700
3	12	6	4.75	1.25	3.8	67	7.875	7.5	.375	5.875	1.625	.23	16,600	16,150,000	103,000
4	6	5.25	4.125	1.125	3.67	89	10.75	10.125	.625	7.625	2.5	.25	13,850	13,400,000	102,000
5	20	4.75	3.625	1.125	3.23	75	9.875	9.375	.5	7.25	2.125	.225	17,000	12,500,000	110,000
6	40	7.75	6.625	1.125	5.9	100	7.875	7.625	.25	5.5	2.125	.117	4,850	15,800,000	57,500
7	36	5	3.9375	1.0625	3.7	61	7.5	6.9375	.562	5.375	1.567	.36	12,000	14,400,000	100,000
8	64	5.5	4.4375	1.0625	4.18	101	11.125	10.6875	.437	7.625	3.062	.142	12,000	15,100,000	113,000
9	24	4.375	3.3125	1.0625	3.1	48	6.5	6.125	.375	5	1.125	.333	14,800	13,700,000	104,000
10	6	6	5	1	5	84	8.625	8.125	.5	5.625	2.5	.2	8,000	17,100,000	102,000
11	20	4.5	3.5	1	3.5	79	9.875	9.4375	.437	7.25	2.187	.201	12,500	14,100,000	111,800
12	16	4.25	3.25	1	3.25	49	6.5	6.125	.375	4.875	1.25	.3	13,100	13,800,000	109,000
13	36	4.75	3.75	1	3.75	37	4.5	4.125	.375	3.25	.875	.43	12,000	18,100,000	114,400
14	35	4.187	3.25	.9375	3.48	50	6.5	6	.5	4.75	1.25	.40	10,500	14,700,000	106,000
15	800	4.5	3.625	.875	4.15	57	6.375	6	.375	4.4375	1.562	.24	6,250	13,100,000	86,500
16	8	3.75	2.875	.875	3.28	41	5.375	5	.375	4.125	1.875	.43	10,800	18,100,000	118,000
17	24	4	3.125	.875	3.56	60	7.375	7	.375	5.4375	1.562	.24	8,650	13,900,000	103,000
18	40	4	3.125	.875	3.56	51	6.5	6	.5	4.625	1.375	.364	12,000	18,900,000	143,000
19	24	3.375	2.625	.75	3.5	62	7.25	7	.25	5.655	1.345	.186	5,250	13,500,000	88,500
20	8	5.75	5	.75	6.67	172	17.625	16	1.625	8.4375	7.562	.212	2,850	13,100,000	86,800
21	8	4.5	3.75	.75	5	84	8.5	8	.5	5.5	2.5	.20	4,000	15,200,000	91,000
22	12	3.5	2.75	.75	3.67	53	6.375	6	.375	4.625	1.375	.273	6,950	16,200,000	115,000
23	4	4	3.25	.75	4.33	44.5	5.75	4.6875	1.0625	3.0625	1.625	.655	6,500	15,400,000	127,000
24	24	3.5	2.875	.625	4.6	68	7.375	7	.375	4.6875	2.312	.162	3,250	13,600 000	97,500
25	100	3.25	2.625	.625	4.2	37.5	4.375	4	.375	2.8125	1.187	.316	4,225	15,500,000	116,500
26	100	3.25	2.625	.625	4.2	43	4.75	4.5625	.187	3.375	1.187	.158	4,000	16,700,000	109,500
27	200	3.5	3	.5	6	108	9.75	9.625	.125	5.8125	3.812	.032	1,250	12,900,000	76,500

The apparent variation of G in the experiments is probably due to differences in the quality of steel and to the fact that the formula for G in the case of helical springs is an approximate one.

The same may be said of the values of S, but if these values are used in designing similar springs one error will off-set the other.

In some few cases, as in No. 18, it was necessary to use an abnormally high value of S to meet the conditions. This necessitated a special grade of steel, and great care in manufacture. Such a spring is not safe when subjected to sudden and heavy loads, or to rapid vibrations, as it would soon break under such treatment; if merely subjected to normal stress, it would last for years.

Springs of a small diameter may safely be subjected to a higher stress than those of a larger diameter, the size of bar being the same. The safe variation of S with R cannot yet be stated.

There is an important limit which should be here mentioned. Springs having two small a diameter as compared with size of bar are subjected to so much internal stress in coiling as to weaken the steel. A spring, to give good service, should never have R less than 3.

The size of bar has much to do with the safe value of S; the probable explanation is this: A large bar has to be heated to a higher temperature in working it, and in high carbon steel this may cause deterioration; when tempered, the bath does not affect it so uniformly, as may be seen by examining the fracture of a large bar.

The above-facts must always be taken into consideration in designing a spring, whatever the grade of steel used. A safe value of S can be determined only by one having an accurate knowledge of the physical characteristics of the steel, the proportions of the spring, and the conditions of use.

For a good grade of steel the values of S on p. 112 have been found safe under ordinary conditions of service, the value of G being taken as 14,500,000.

For bars over 1¼ in. in diameter a stress of more than 100,000 should not be used. Where a spring is subjected to sudden shocks a smaller value of S is necessary.

As has been noted, the springs referred to in this paper were all compression springs. Experience has shown that in close

coil or extension springs the value of G is the same, but that the safe value of S is only about two-thirds that for a compression spring of the same dimensions.

VALUES OF S

	$R=3$	$R=8$
$d=\frac{3}{8}$ in. or less	112,000	85,000
$d=\frac{1}{16}$ in. to $\frac{3}{4}$ in.	110,000	80,000
$d=\frac{13}{16}$ in. to $1\frac{1}{4}$ in.	105,000	75,000

47. Spring in Torsion.—If a helical spring is used to resist torsion instead of tension or compression, the wire itself is subjected to a bending moment. We will use the same notation as in the last article, only that P will be taken as a force acting tangentially to the circumference of the spring at a distance $\frac{D}{2}$ from the axis, and S will now be the safe transverse strength of the wire, having the following values:

$S=60{,}000$ for spring brass wire
$=90{,}000$ to $125{,}000$ for cast steel tempered
$E=9{,}000{,}000$ for spring brass wire
$=30{,}000{,}000$ for cast steel tempered.

Let θ = angle through which the spring is turned by P.

The bending moment on the wire will be the same throughout and $=\frac{PD}{2}$. This is best illustrated by a model.

To entirely straighten the wire by unwinding the spring would require the same force as to bend straight wire to the curvature of the helix.

To simplify the equations we will disregard the obliquity of the helix, then will $l=\pi Dn$ and the radius of curvature

$$=\frac{D}{2}.$$

Let M = bending moment caused by entirely straightening the wire; then by mechanics

$$M=\frac{EI}{R}=\frac{2EI}{D}$$

and the corresponding angle through which spring is turned is $2\pi n$.

But it is assumed that a force P with a radius $\frac{D}{2}$ turns the spring through an angle θ.

$$\therefore \frac{PD}{2} = \frac{2EI}{D} \times \frac{\theta}{2\pi n}$$

$$= \frac{EI\theta}{\pi D n} = \frac{EI\theta}{l}$$

Solving for θ:

$$\theta = \frac{PDl}{2EI} \tag{a}$$

and if wire is round

$$\theta = \frac{10.2PDl}{Ed^4}. \tag{64}$$

The bending moment for round wire will be

$$\frac{PD}{2} = \frac{Sd^3}{10.2} \tag{65}$$

and this will also be the safe twisting moment that can be applied to the spring when S = working strength of wire. The safe angle of deflection is found by substituting this value of $\frac{PD}{2}$ in (64):

Reducing:

$$\theta = \frac{2lS}{Ed}. \tag{66}$$

48. Flat Springs.—Ordinary flat springs of uniform rectangular cross-section can be treated as beams and their strength and deflection calculated by the usual formulas.

In such a spring the bending and the stress are greatest at some one point and the curvature is not uniform.

To correct this fault the spring is made of a constant depth but varying width.

If the spring is fixed at one end and loaded at the other the plan should be a triangle with the apex at loaded end. If it is supported at the two ends and loaded at the center, the plan should be two triangles with their bases together under the load forming a rhombus. The deflection of such a spring is one and a half times that of a rectangular spring.

As such a spring might be of an inconvenient width, a compound or leaf-spring is made by cutting the triangular spring into strips parallel to the axis, and piling one above another as in Fig. 37.

This arrangement does not change the principle, save that the friction between the leaves may increase the resistance somewhat.

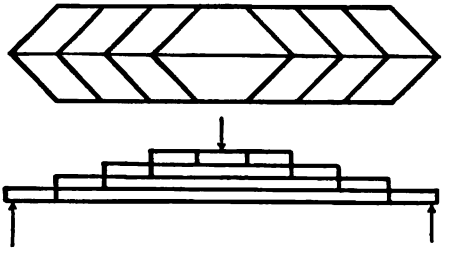

FIG. 37.

Let l = length of span
b = breadth of leaves
t = thickness of leaves
n = number of leaves
W = load at center
Δ = deflection at center.

S and E may be taken as 80,000 and 30,000,000 respectively.

Strength:

$$M = \frac{Wl}{4} = \frac{Snbt^2}{6}$$

$$W = \frac{2}{3} \cdot \frac{Snbt^2}{l} \tag{67}$$

Elasticity:

$$\Delta = \frac{Wl^3}{32EI} \text{ where } I = \frac{nbt^3}{12}$$

$$\therefore \Delta = \frac{3Wl^3}{8Enbt^3}. \tag{68}$$

49. Elliptic and Semi-elliptic Springs.—Springs as they are usually designed for service differ in some respects from those just described, as may be seen by reference to Fig. 38. A band is used

at the center to confine the leaves in place. As this band constrains the spring at the center it is best to consider the latter as made up of two cantilevers each having a length of $\frac{l-w}{2}$ where w is the width of band. The spring usually contains several full-length leaves with blunt ends, the remaining leaves being graduated as to length and pointed as in Fig. 38. The blunt full-length leaves constitute a cantilever of uniform cross-section, while the graduated leaves form a cantilever of uniform strength. Under similar conditions as to load and fiber stress the latter will have a deflection 50 per cent greater than the former. Sup-

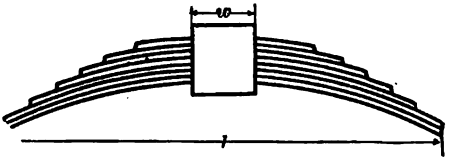

FIG. 38.

posing that there is no initial stress between the leaves caused by the band, both sets must have the same deflection. This means that more than its proportion of the load will be carried by the full-length set and consequently it will have a greater fiber stress. This difficulty can be obviated by having an initial gap between the graduated set and the full-length set and closing this with the band.

If this gap is made half the working deflection of the spring, the total deflection of the graduated set under the working load will be 50 per cent greater than that of the full-length set and the fiber stress will be uniform.

The load will then be divided between the two sets in proportion to the number of leaves in each.

One of the full-length leaves must be counted as a part of the graduated set. When the gap is closed by a band there will be an initial pull on the band due to the deflection of the spring.

This can be determined for any given spring by regarding the two sets of leaves as simple beams the sum of whose deflections under the pull P is equal to the depth of the gap.

Full elliptic springs can be designed in a similar manner but the total deflection will be double that of the semi-elliptic spring.

The mathematical discussion of which the following is an abstract was given by Mr. E. R. Morrison,[1] who, as far as the author knows, was the first to treat the subject in this way.

Let c = whole length of spring
w = width of band
l $=\frac{c-w}{2}$ = length of each cantilever
b = breadth of leaves
t = thickness of one leaf
n = total number of leaves
n' = number of full-length leaves
n'' = number of graduated leaves
r = ratio $\frac{n'}{n}$
S = maximum fiber stress in spring
S' = maximum fiber stress in full-length leaves
Δ = total deflection of spring
Δ' = total deflection of full-length leaves if unbanded
Δ'' = total deflection of graduated leaves if unbanded
P = total load on spring
P' = portion of load on one end of full-length leaves
P'' = portion of load on one end of graduated leaves.

Assuming that the maximum stress should be the same in both parts:

$$S' = S''$$

$$\therefore \frac{6P'l}{n'bt^2} = \frac{6P''l}{n''bt^2}$$

and

$$\frac{P'}{P''} = \frac{n'}{n''}. \qquad \text{(a)}$$

The deflections, as already stated on preceding page, will be unequal. For a cantilever of uniform section (full-length leaves):

$$\Delta' = \frac{4P'l^3}{En'bt^3} \qquad \text{(b)}$$

and for one of uniform strength (graduated leaves):

$$\Delta'' = \frac{6P''l^3}{En''bt^3}. \qquad \text{(c)}$$

[1] *Mchy.*, N. Y., Jan., 1910.

But from (a)

$$\frac{P'}{n'} = \frac{P''}{n''}$$

and $$\Delta' = \frac{4P''l^3}{En''bt^3}$$

and $$\Delta'' - \Delta' = \frac{2P''l^3}{En''bt^3}$$

But also

$$\frac{P''}{n''} = \frac{P}{2n}$$

and $$\Delta'' - \Delta' = \frac{Pl^3}{Enbt^3}. \qquad \text{(d)}$$

Equation (d) gives the excess of the deflection of the graduated portion over that of the full-length portion and is the proper depth of gap between the two portions before banding. To find the effect of the banding:

Let P_b = force exerted by band
d' = deflection caused by band in full-length leaves
d'' = deflection caused by band in graduated leaves.

Then,

$$d' = \frac{2P_b l^3}{En'bt^3} \qquad \text{(e)}$$

and

$$d'' = \frac{3P_b l^3}{En''bt^3} \qquad \text{(f)}$$

(Since force at end of each cantilever $= \frac{P_b}{2}$.)

By division and cancellation,

$$d' = \frac{2n''d''}{3n'}. \qquad \text{(g)}$$

The depth of gap $= d' + d'' = \frac{Pl^3}{Enbt^3}$ from equation (d).

Combining:

$$d'' + \frac{2n''}{3n'}d'' = \frac{Pl^3}{Enbt^3}$$

$$d'' = \left(\frac{3n'}{3n' + 2n''}\right) \frac{Pl^3}{Enbt^3} \qquad \text{(h)}$$

Equating (f) and (h):

$$\frac{3P_b l^3}{En''bt^3} = \left(\frac{3n'}{3n' + 2n''}\right) \frac{Pl^3}{Enbt^3}.$$

Solving for P_b:

$$P_b = \frac{n'n''}{n(3n' + 2n'')} P.$$

Or letting $n' = rn$ $\qquad n'' = (l-r)n$

$$P_b = \frac{r(l-r)}{2+r} P \tag{i}$$

and this equation gives the force exerted by the band in terms of the total load.

The working deflection of the spring may be obtained as follows:

The total deflection of the graduated leaves under the load P is by equation (c):

$$\Delta'' = \frac{6P''l^3}{En''bt^3} = \frac{3Pl^3}{Enbt^3}.$$

But a part of this total is produced by the banding, equation (h):

$$d'' = \left(\frac{3n'}{3n' + 2n''}\right) \frac{Pl^3}{Enbt^3}.$$

The remaining deflection or that due to the application of the load P is:

$$\Delta'' - d'' = \left(3 - \frac{3n'}{3n' + 2n''}\right) \frac{Pl^3}{Enbt^3}.$$

or

$$\Delta = \frac{6}{r+2} \cdot \frac{Pl^3}{Enbt^3}. \tag{j}$$

But

$$P = 2(P' + P'') = 2\,\frac{Snbt^2}{6l}$$

where $P' + P''$ = load at each end of spring and $(P' + P'')l$ = bending moment at band.

Substituting in (j) and reducing:

$$\Delta = \frac{2}{2+r} \cdot \frac{Sl^2}{Et}. \tag{69}$$

If all the leaves are full length:

$$r = l \text{ and } \Delta = \frac{2Sl^2}{3Et}.$$

If all the leaves are graduated:

$$r = O \text{ and } \Delta = \frac{Sl^2}{Et}.$$

PROBLEMS

1. A spring balance is to weigh 50 lb. with an extension of 2 in., the diameter of spring being $\frac{5}{8}$ in. and the material, tempered steel.

Determine the diameter and length of wire, and number of coils.

2. Determine the safe twisting moment and angle of torsion for the spring in example 1, if used for a torsional spring.

3. Test values of G and S from data given in Table XXXIII.

4. By using above table design a spring 8 in. long to carry a load of 2 tons without closing the coils more than half way.

5. Design a compound flat spring for a locomotive to sustain a load of 16,000 lb. at the center, the span being 40 in., the number of leaves 12 and the material steel.

6. Determine the maximum deflection of the above spring, under the working load.

7. A semi-elliptic spring has 9 leaves in all and 6 graduated leaves, and the load on each end is $P = 4000$ lb. Develop formulas for the fiber stress in each set of leaves if there is no initial stress. Determine proper breadth and thickness of leaves if length of span is 42 in.

8. In Prob. 7 develop a formula for the necessary gap to equalize the fiber stresses.

9. In Prob. 8 determine the pull on the band due to the initial stress.

10. A semi-elliptic spring has 4 leaves 36 in. long, and 12 graduated leaves. The leaves are all 4 in. wide and $\frac{3}{8}$ in. thick, and the band at the center is 4 in. wide. If there is no initial stress find the share of the load and the fiber stress on each set of leaves when there is a load of 6 tons on the center. Also determine deflection.

11. In Prob. 10, determine the amount of gap needed to equalize the stresses in the two sets of leaves, and the pull on the band at the center. Determine the deflection under the load.

12. Measure various indicator springs and determine value of G from rating of springs.

13. Measure various brass extension springs, calculate safe static load and safe stretch.

14. Make an experiment on torsion spring to determine distortion under a given load and calculate value of E.

REFERENCES

Vibration of Springs. *Am. Mach.*, May 11, 1905.
Tables of Loads and Deflections. *Am. Mach.*, Dec. 20, 1906.
The Constructor. *Reuleaux.*

CHAPTER VI

SLIDING BEARINGS

50. Slides in General.—The surfaces of all slides should have sufficient area to limit the intensity of pressure and prevent forcing out of the lubricant. No general rule can be given for the limit of pressure. Tool marks parallel to the sliding motion should not be allowed, as they tend to start grooving. The sliding piece should be as long as practicable to avoid local wear on stationary piece and for the same reason should have sufficient stiffness to prevent springing. A slide which is in continuous motion should lap over the guides at the ends of stroke, to prevent the wearing of shoulders on the latter and the finished surfaces of all slides should have exactly the same width as the surfaces on which they move for a similar reason.

Where there are two parallel guides to motion as in a lathe or planer it is better to have but one of these depended upon as an accurate guide and to use the other merely as a support. It must be remembered that any sliding bearing is but a copy of the ways of the machine on which it was planed or ground and in turn may reproduce these same errors in other machines. The interposition of hand-scraping is the only cure for these hereditary complaints.

In designing a slide one must consider whether it is accuracy of motion that is sought, as in the ways of a planer or lathe, or accuracy of position as in the head of a milling machine. Slides may be divided according to their shapes into angular, flat and circular slides.

51. Angular Slides.—An angular slide is one in which the guiding surface is not normal to the direction of pressure. There is a tendency to displacement sideways, which necessitates a second guiding surface inclined to the first. This oblique pressure constitutes the principal disadvantage of angular slides.

Their principal advantage is the fact that they are either self-adjusting for wear, as in the ways of lathes and planers, or require at most but one adjustment.

Fig. 39 shows one of the *V's* of an ordinary planing machine. The platen is held in place by gravity. The angle between the two surfaces is usually 90 degrees but may be more in heavy machines. The grooves *g*, *g* are intended to hold the oil in place; oiling is sometimes effected by small rolls recessed into the lower piece and held against the platen by springs.

The principal advantage of this form of way is its ability to hold oil and the great disadvantage, its faculty for catching chips and dirt.

Fig. 40 shows an inverted *V* such as is common on the ways of engine lathes. The angle is about the same as in the preceding form but the top of the *V* should be rounded as a precaution against nicks and bruises.

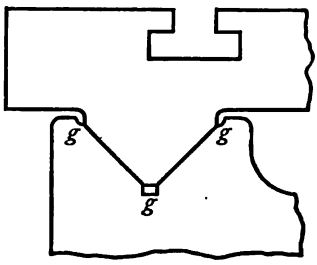

FIG. 39.

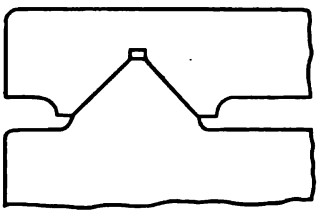

FIG. 40.

The inverted *V* is preferred for lathes since it will not catch dirt and chips. It needs frequent lubrication as the oil runs off rapidly. Some lathe carriages are provided with extensions filled with oily felt or waste to protect the ways from dirt and keep them wiped and oiled. Side pressure tends to throw the carriage from the ways; this action may be prevented by a heavy weight hung on the carriage or by gibbing the carriage at the back (see Fig. 46). The objection to this latter form of construction is the fact that it is practically impossible to make and keep the two *V's* and the gibbed slide all parallel.

Fig. 41 shows a compound *V* sometimes used on heavy machines. The obtuse angle (about 150 degrees) takes the heavy

CHAPTER VI

SLIDING BEARINGS

50. Slides in General.—The surfaces of all slides should have sufficient area to limit the intensity of pressure and prevent forcing out of the lubricant. No general rule can be given for the limit of pressure. Tool marks parallel to the sliding motion should not be allowed, as they tend to start grooving. The sliding piece should be as long as practicable to avoid local wear on stationary piece and for the same reason should have sufficient stiffness to prevent springing. A slide which is in continuous motion should lap over the guides at the ends of stroke, to prevent the wearing of shoulders on the latter and the finished surfaces of all slides should have exactly the same width as the surfaces on which they move for a similar reason.

Where there are two parallel guides to motion as in a lathe or planer it is better to have but one of these depended upon as an accurate guide and to use the other merely as a support. It must be remembered that any sliding bearing is but a copy of the ways of the machine on which it was planed or ground and in turn may reproduce these same errors in other machines. The interposition of hand-scraping is the only cure for these hereditary complaints.

In designing a slide one must consider whether it is accuracy of motion that is sought, as in the ways of a planer or lathe, or accuracy of position as in the head of a milling machine. Slides may be divided according to their shapes into angular, flat and circular slides.

51. Angular Slides.—An angular slide is one in which the guiding surface is not normal to the direction of pressure. There is a tendency to displacement sideways, which necessitates a second guiding surface inclined to the first. This oblique pressure constitutes the principal disadvantage of angular slides.

Their principal advantage is the fact that they are either self-adjusting for wear, as in the ways of lathes and planers, or require at most but one adjustment.

Fig. 39 shows one of the *V's* of an ordinary planing machine. The platen is held in place by gravity. The angle between the two surfaces is usually 90 degrees but may be more in heavy machines. The grooves *g*, *g* are intended to hold the oil in place; oiling is sometimes effected by small rolls recessed into the lower piece and held against the platen by springs.

The principal advantage of this form of way is its ability to hold oil and the great disadvantage, its faculty for catching chips and dirt.

Fig. 40 shows an inverted *V* such as is common on the ways of engine lathes. The angle is about the same as in the preceding form but the top of the *V* should be rounded as a precaution against nicks and bruises.

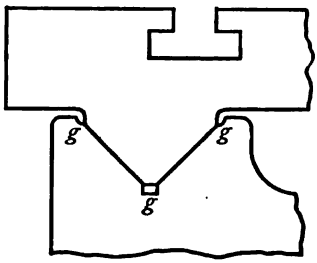

FIG. 39.

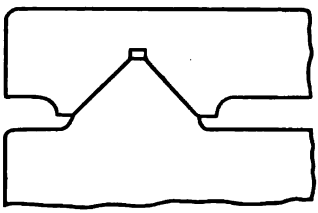

FIG. 40.

The inverted *V* is preferred for lathes since it will not catch dirt and chips. It needs frequent lubrication as the oil runs off rapidly. Some lathe carriages are provided with extensions filled with oily felt or waste to protect the ways from dirt and keep them wiped and oiled. Side pressure tends to throw the carriage from the ways; this action may be prevented by a heavy weight hung on the carriage or by gibbing the carriage at the back (see Fig. 46). The objection to this latter form of construction is the fact that it is practically impossible to make and keep the two *V's* and the gibbed slide all parallel.

Fig. 41 shows a compound *V* sometimes used on heavy machines. The obtuse angle (about 150 degrees) takes the heavy

CHAPTER VI

SLIDING BEARINGS

50. Slides in General.—The surfaces of all slides should have sufficient area to limit the intensity of pressure and prevent forcing out of the lubricant. No general rule can be given for the limit of pressure. Tool marks parallel to the sliding motion should not be allowed, as they tend to start grooving. The sliding piece should be as long as practicable to avoid local wear on stationary piece and for the same reason should have sufficient stiffness to prevent springing. A slide which is in continuous motion should lap over the guides at the ends of stroke, to prevent the wearing of shoulders on the latter and the finished surfaces of all slides should have exactly the same width as the surfaces on which they move for a similar reason.

Where there are two parallel guides to motion as in a lathe or planer it is better to have but one of these depended upon as an accurate guide and to use the other merely as a support. It must be remembered that any sliding bearing is but a copy of the ways of the machine on which it was planed or ground and in turn may reproduce these same errors in other machines. The interposition of hand-scraping is the only cure for these hereditary complaints.

In designing a slide one must consider whether it is accuracy of motion that is sought, as in the ways of a planer or lathe, or accuracy of position as in the head of a milling machine. Slides may be divided according to their shapes into angular, flat and circular slides.

51. Angular Slides.—An angular slide is one in which the guiding surface is not normal to the direction of pressure. There is a tendency to displacement sideways, which necessitates a second guiding surface inclined to the first. This oblique pressure constitutes the principal disadvantage of angular slides.

Their principal advantage is the fact that they are either self-adjusting for wear, as in the ways of lathes and planers, or require at most but one adjustment.

Fig. 39 shows one of the *V's* of an ordinary planing machine. The platen is held in place by gravity. The angle between the two surfaces is usually 90 degrees but may be more in heavy machines. The grooves *g*, *g* are intended to hold the oil in place; oiling is sometimes effected by small rolls recessed into the lower piece and held against the platen by springs.

The principal advantage of this form of way is its ability to hold oil and the great disadvantage, its faculty for catching chips and dirt.

Fig. 40 shows an inverted *V* such as is common on the ways of engine lathes. The angle is about the same as in the preceding form but the top of the *V* should be rounded as a precaution against nicks and bruises.

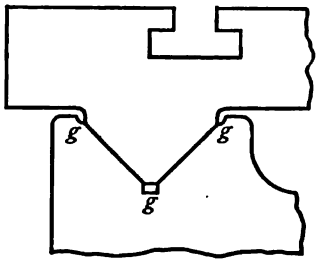

FIG. 39.

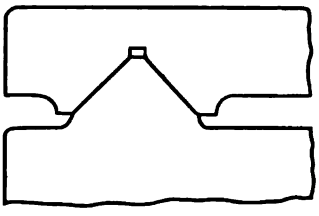

FIG. 40.

The inverted *V* is preferred for lathes since it will not catch dirt and chips. It needs frequent lubrication as the oil runs off rapidly. Some lathe carriages are provided with extensions filled with oily felt or waste to protect the ways from dirt and keep them wiped and oiled. Side pressure tends to throw the carriage from the ways; this action may be prevented by a heavy weight hung on the carriage or by gibbing the carriage at the back (see Fig. 46). The objection to this latter form of construction is the fact that it is practically impossible to make and keep the two *V's* and the gibbed slide all parallel.

Fig. 41 shows a compound *V* sometimes used on heavy machines. The obtuse angle (about 150 degrees) takes the heavy

vertical pressure, while the sides, inclined only 8 or 10 degrees, take any side pressure which may develop.

52. Gibbed Slides.—All slides which are not self-adjusting for wear must be provided with gibs and adjusting screws. Fig. 42 shows the most common form as used in tool slides for lathes and planing machines.

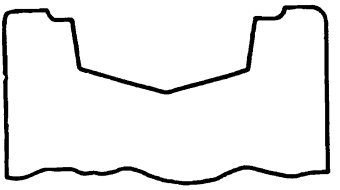

FIG. 41.

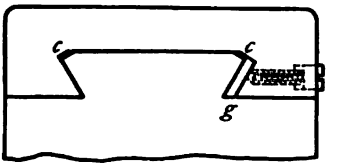

FIG. 42.

The angle employed is usually 60 degrees; notice that the corners *c c* are clipped for strength and to avoid a corner bearing; notice also the shape of gib. It is better to have the points of screws coned to fit gib and *not* to have flat points fitting recesses in gib. The latter form tends to spread the joint apart by forcing the gib down. If the gib is too thin it will spring under the screws and cause uneven wear.

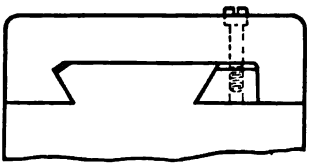

FIG. 43.

The cast-iron gib, Fig. 43, is free from this latter defect but makes the slide rather clumsy. The screws, however, are more accessible in this form. Gibs are sometimes made slightly tapering and adjusted by a screw and nut giving endwise motion.

53. Flat Slides.—This type of slide requires adjustment in two directions and is usually provided with gibs and adjusting screws. Flat ways on machine tools are the rule in English practice and are gradually coming into use in this country. Although more expensive at first and not so simple they are more durable and usually more accurate than the angular ways.

Fig. 44 illustrates a flat way for a planing machine. The other

way would be similar to this but without adjustment. The normal pressure and the friction are less than with angular ways and no amount of side pressure will lift the platen from its position.

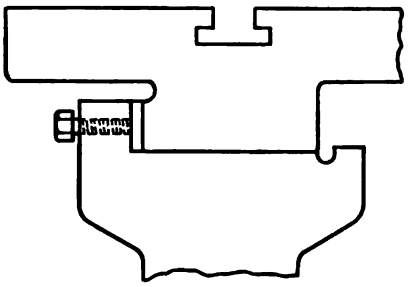

FIG. 44.

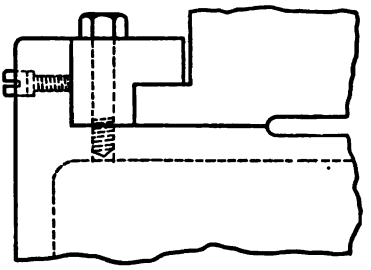

FIG. 45.

Fig. 45 shows a portion of the ram of a shaping machine and illustrates the use of an *L* gib for adjustment in two directions. Fig. 46 shows a gibbed slide for holding down the back of a lathe carriage with two adjustments.

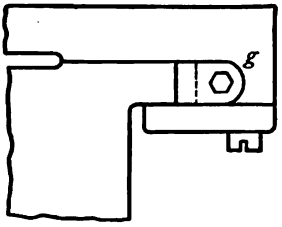

FIG. 46.

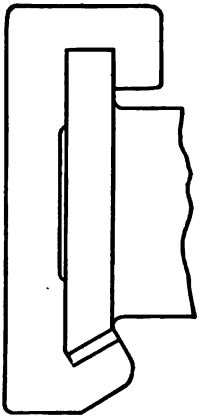

FIG. 47.

The gib *g* is tapered and adjusted by a screw and nuts. The saddle of a planing machine or the table of a shaper usually has a rectangular gibbed slide above and a taper slide below, this form of the upper slide being necessary to hold the weight of the

overhanging metal (see Fig. 47). Some lathes and planers are built with one *V* or angular way for guiding the carriage or platen and one flat way acting merely as a support.

54. Circular Guides.—Examples of this form may be found in the column of the drill press and the overhanging arm of the milling machine. The cross heads of steam engines are sometimes fitted with circular guides; they are more frequently flat or angular. One advantage of the circular form is the fact that the cross head can adjust itself to bring the wrist pin parallel to the crank pin. The guides can be bored at the same setting as the cylinder in small engines and thus secure good alignment.

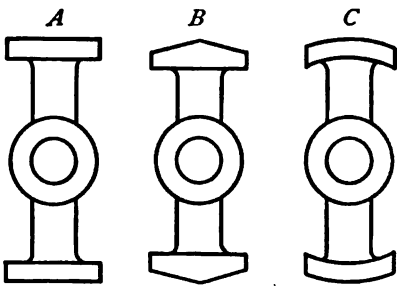

Fig. 48.

Fig. 48 illustrates various shapes of cross head slides in common use.

55. Stuffing Boxes.—In steam engines and pumps the glands for holding the steam and water packing are the sliding bearings

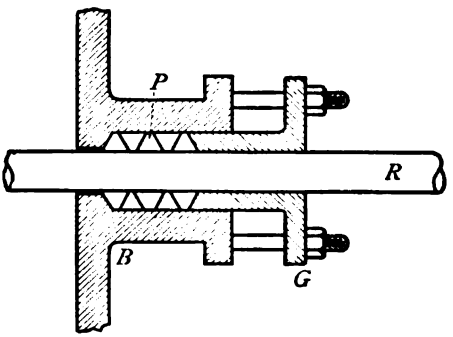

Fig. 49.

which cause the greatest friction and the most trouble. Fig. 49 shows the general arrangement. *B* is the stuffing box attached to the cylinder head; *R* is the piston rod; *G* the gland adjusted by

nuts on the studs shown; *P* the packing contained in a recess in the box and consisting of rings, either of some elastic fibrous material like hemp and woven rubber cloth or of some soft metal like Babbitt metal. The pressure between the packing and the rod, necessary to prevent leakage of steam or water, is the cause of considerable friction and lost work. Experiments made from time to time in the laboratories of the Case School have shown the extent and manner of variation of this friction. The results for steam packings may be summarized as follows:

1. That the softer rubber and graphite packings, which are self-adjusting and self-lubricating, as in Nos. 2, 3, 7, 8, and 11, consume less power than the harder varieties. No. 17, the old braided flax style, gives very good results. (See Table (XXXIV.)

2. That oiling the rod will reduce the friction with any packing.

3. That there is almost no limit to the loss caused by the injudicious use of the monkey-wrench.

4. That the power loss varies almost directly with the steam pressure in the harder varieties, while it is approximately constant with the softer kinds.

The diameter of rod used—2 in.—would be appropriate for engines from 50 to 100 horse-power. The piston speed was about 140 ft. per minute in the experiments, and the horse-power varied from .036 to .400 at 50 lb. steam pressure, with a safe average for the softer class of packings of .07 horse-power.

At a piston speed of 600 ft. per minute, the same friction would give a loss of from .154 to 1.71 with a working average of .30 horse-power, at a mean steam pressure of 50 lb.

In Table XXXIV Nos. 6, 14, 15, and 16 are square, hard rubber packings without lubricants.

Similar experiments on hydraulic packings under a water pressure varying from 10 to 80 lb. per square inch gave results as shown in Table XXXVI.

The figures given are for a 2-in. rod running at an average piston speed of 140 ft. per minute.

CHAPTER VI

SLIDING BEARINGS

50. Slides in General.—The surfaces of all slides should have sufficient area to limit the intensity of pressure and prevent forcing out of the lubricant. No general rule can be given for the limit of pressure. Tool marks parallel to the sliding motion should not be allowed, as they tend to start grooving. The sliding piece should be as long as practicable to avoid local wear on stationary piece and for the same reason should have sufficient stiffness to prevent springing. A slide which is in continuous motion should lap over the guides at the ends of stroke, to prevent the wearing of shoulders on the latter and the finished surfaces of all slides should have exactly the same width as the surfaces on which they move for a similar reason.

Where there are two parallel guides to motion as in a lathe or planer it is better to have but one of these depended upon as an accurate guide and to use the other merely as a support. It must be remembered that any sliding bearing is but a copy of the ways of the machine on which it was planed or ground and in turn may reproduce these same errors in other machines. The interposition of hand-scraping is the only cure for these hereditary complaints.

In designing a slide one must consider whether it is accuracy of motion that is sought, as in the ways of a planer or lathe, or accuracy of position as in the head of a milling machine. Slides may be divided according to their shapes into angular, flat and circular slides.

51. Angular Slides.—An angular slide is one in which the guiding surface is not normal to the direction of pressure. There is a tendency to displacement sideways, which necessitates a second guiding surface inclined to the first. This oblique pressure constitutes the principal disadvantage of angular slides.

Their principal advantage is the fact that they are either self-adjusting for wear, as in the ways of lathes and planers, or require at most but one adjustment.

Fig. 39 shows one of the *V's* of an ordinary planing machine. The platen is held in place by gravity. The angle between the two surfaces is usually 90 degrees but may be more in heavy machines. The grooves *g*, *g* are intended to hold the oil in place; oiling is sometimes effected by small rolls recessed into the lower piece and held against the platen by springs.

The principal advantage of this form of way is its ability to hold oil and the great disadvantage, its faculty for catching chips and dirt.

Fig. 40 shows an inverted *V* such as is common on the ways of engine lathes. The angle is about the same as in the preceding form but the top of the *V* should be rounded as a precaution against nicks and bruises.

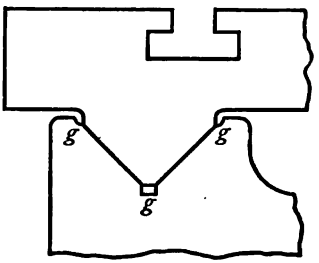

FIG. 39.

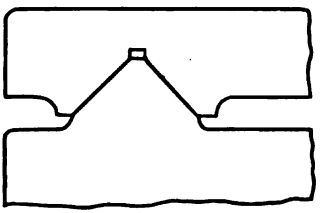

FIG. 40.

The inverted *V* is preferred for lathes since it will not catch dirt and chips. It needs frequent lubrication as the oil runs off rapidly. Some lathe carriages are provided with extensions filled with oily felt or waste to protect the ways from dirt and keep them wiped and oiled. Side pressure tends to throw the carriage from the ways; this action may be prevented by a heavy weight hung on the carriage or by gibbing the carriage at the back (see Fig. 46). The objection to this latter form of construction is the fact that it is practically impossible to make and keep the two *V's* and the gibbed slide all parallel.

Fig. 41 shows a compound *V* sometimes used on heavy machines. The obtuse angle (about 150 degrees) takes the heavy

CHAPTER VII

JOURNALS, PIVOTS AND BEARINGS

56. Journals.—A journal is that part of a rotating shaft which rests in the bearings and is of necessity a surface of revolution, usually cylindrical or conical. The material of the journal is generally steel, sometimes soft and sometimes hardened and ground.

The material of the bearing should be softer than the journal and of such a quality as to hold oil readily. The cast metals such as cast iron, bronze and Babbitt metal are suitable on account of their porous, granular character. Wood, having the grain normal to the bearing surface, is used where water is the lubricant, as in water wheel steps and stern bearings of propellers.

Bearing materials may naturally be divided into soft and hard metals. The standard soft metal is so-called "genuine Babbitt," of the following composition:

Tin, 85 to 89 per cent.
Copper, 2 to 5 per cent.
Antimony, 7 to 10 per cent.

The substitution of lead for tin and the omission of the copper makes a cheaper and softer metal suitable for low pressures and speeds. The addition of more antimony hardens the metal.

The hard metals include the various brasses and bronzes ranging from soft yellow brass to phosphor and aluminum bronzes.

Professor R. C. Carpenter recommends as suitable for a bearing an aluminum bronze whose composition is:

Aluminum, 50 per cent.
Zinc, 25 per cent.
Tin, 25 per cent.

This metal is light, fairly hard, and will not melt readily.[1]

[1] Trans. A. S. M. E., Vol. XXVII, p. 425.

57. Adjustment.—Bearings wear more or less rapidly with use and need to be adjusted to compensate for the wear. The adjustment must be of such a character and in such a direction as to take up the wear and at the same time maintain as far as possible the correct shape of the bearing. The adjustment should then be in the line of the greatest pressure.

Fig. 50 illustrates some of the more common ways of adjusting a bearing, the arrows showing the direction of adjustment and presumably the direction of pressure; (a) is the most usual where the principal wear is vertical, (d) is a form frequently used on the main journals of engines when the wear is in two directions,

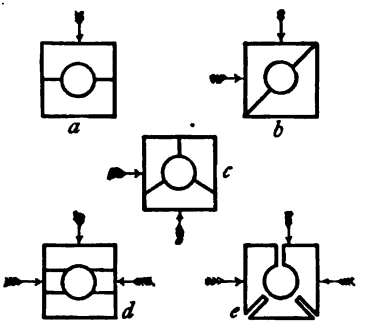

FIG. 50.

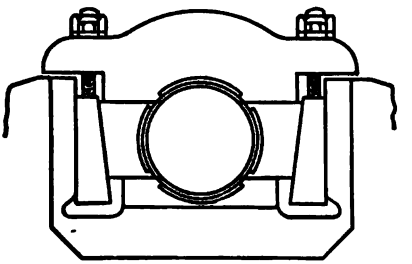

FIG. 51.

horizontal on account of the steam pressure and vertical on account of the weight of shaft and fly-wheel. All of these are more or less imperfect since the bearing, after wear and adjustment, is no longer cylindrical but is made up of two or more approximately cylindrical surfaces.

A bearing slightly conical and adjusted endwise as it wears, is probably the closest approximation to correct practice.

Fig. 51 shows the main bearing of the Porter-Allen engine, one of the best examples of a four part adjustment. The cap is adjusted in the normal way with bolts and nuts; the bottom can be raised and lowered by liners placed underneath; the cheeks can be moved in or out by means of the wedges shown. Thus it is possible not only to adjust the bearing for wear but to align the shaft perfectly.

A three part bearing for the main journal of an engine is

shown in Fig. 52. In this bearing there is one horizontal adjustment instead of two as in Fig. 51.

The main bearing of the spindle in a lathe, as shown in Fig. 53, offers a good example of symmetrical adjustment. The head-

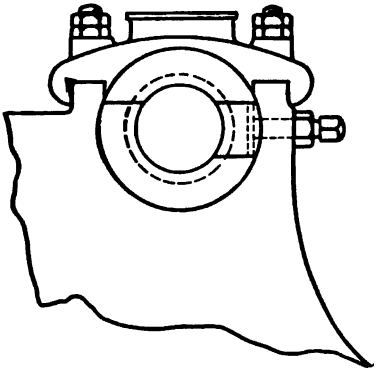

FIG. 52.

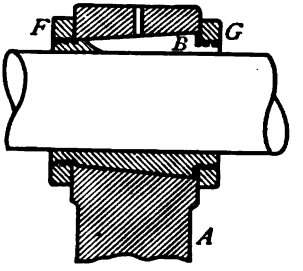

FIG. 53.

stock *A* has a conical hole to receive the bearing *B*, which latter can be moved lengthwise by the nuts *FG*. The bearing may be split into two, three or four segments or it may be cut as shown in *c*, Fig. 50, and sprung into adjustment. A careful distinction

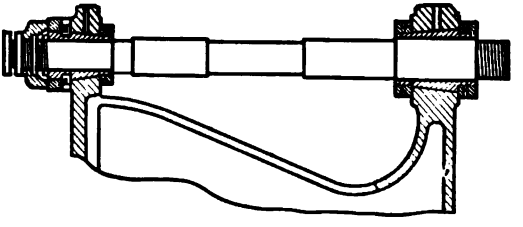

FIG. 54.

must be made between this class of bearing and that before mentioned, where the journal itself is conical and adjusted endwise. A good example of the latter form is seen in the spindles of many milling machines.

Fig. 54 shows the spindle of an engine lathe complete with its two bearings. The end thrust is taken by a fiber washer backed

by an adjusting collar and check nut. Both bearings belong to the class shown in Fig. 53.

A conical journal with end adjustment is illustrated in Fig. 55, which shows the spindle of a milling machine. The front journal is conical and is adjusted for wear by drawing it back into its bearing with the nut. The rear journal on the other hand is cylindrical and its bearing is adjusted as are those just described. The end thrust is taken by two loose rings at the front end of the spindle.

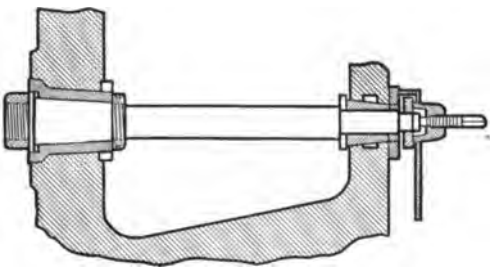

FIG. 55.

58. Lubrication.—The bearings of machines which run intermittently, like most machine tools, are oiled by means of simple oil holes, but machinery which is in continuous motion as is the case with line shafting and engines requires some automatic system of lubrication. There is not space in this book for a detailed description of all the various types of oiling devices and only a general classification will be attempted.

Lubrication is effected in the following ways:

1. By grease cups.
2. By oil cups.
3. By oily pads of felt or waste.
4. By oil wells with rings or chains for lifting the oil.
5. By centrifugal force through a hole in the journal itself.

Grease cups have little to recommend them except as auxiliary safety devices. Oil cups are various in their shapes and methods of operation and constitute the cheap class of lubricating devices. They may be divided according to their operation into wick oilers, needle feed, and sight feed. The two first mentioned are nearly obsolete and the sight-feed oil cup, which drops the oil at regular

Note: For adjustable pedestal and hanging bearings see the chapter on shafting.

59. Friction of Journals:

Let W = the total load of a journal in pounds
l = the length of journal in inches
d = the diameter of journal in inches
N = number of revolutions per minute
v = velocity of rubbing in feet per minute
F = friction at surface of journal in pounds
= $W \tan \Psi$ nearly, where Ψ is the angle of repose for the two materials.

If a journal is properly fitted in its bearing and does not bind, the value of F will not exceed $W \tan \Psi$ and may be slightly less. The value of $\tan \Psi$ varies according to the materials used and the kind of lubrication, from .05 to .01 or even less. See experiments described in Art. 62. The work absorbed in friction may be thus expressed:

$$Fv = W \tan \Psi \times \frac{\pi d N}{12} = \frac{\pi d N W \tan \Psi}{12} \text{ ft. lbs. per min.} \qquad (70)$$

60. Limits of Pressure.—Too great an intensity of pressure between the surface of a journal and its bearing will force out the lubricant and cause heating and possibly "seizing." The safe limit of pressure depends on the kind of lubricant, the manner of its application and upon whether the pressure is continuous or intermittent. The projected area of a journal, or the product of its length by its diameter, is used as a divisor.

The journals of railway cars offer a good example of continuous pressure and severe service. A limit of 300 lb. per square inch of projected area has been generally adopted in such cases.

In the crank and wrist pins of engines, the reversal of pressure diminishes the chances of the lubricant being squeezed out, and a pressure of 500 lb. per square inch is generally allowed.

The use of heavy oils or of an oil bath, and the employment of harder materials for the journal and its bearing allow of even greater pressures.

Professor Barr's investigations of steam engine proportions[1] show that the pressure per square inch on the cross-head pin varies from ten to twenty times that on the piston, while the intensity of pressure on the crank pin is from two to eight times that on the piston. Allowing a mean pressure on the piston of 50 lb. per square inch would give the following range of pressures:

	Minimum	Maximum
Wrist pins	500	1,000
Crank pins	100	400

The larger values for the wrist pins are allowable on account of the comparatively low velocity of. rubbing. Naturally the larger values for the pressure are found in the low-speed engines.

A discussion of the subject of bearings is reported in the transactions of the American Society of Mechanical Engineers for 1905–06 and some valuable data are furnished.

Mr. George M. Basford says that the bearing areas of locomotive journals are determined chiefly by the possibilities of lubrication. Crank pins may be loaded to from 1500 to 1700 lb. per square inch, since the reciprocation of the rods makes lubrication easy. Wrist pins have been loaded as high as 4000 lb. per square inch, the limited arc of motion and the alternating pressures making this possible.

Locomotive driving journals on the other hand are limited to the following pressures:

Passenger locomotives	190 lb. per square inch.
Freight locomotives	200 lb. per square inch.
Switching locomotives	220 lb. per square inch.
Cars and tender bearings	300 lb. per square inch.

Mr. H. G. Reist gives some figures on the practice of the General Electric Company, for motors and generators.

This company allows from 30 to 80 lb. pressure per square inch with an average value of from 40 to 45 lb. The rubbing speeds vary from 40 ft. to 1200 ft. per minute. Mr. Reist quotes approvingly the formula of Dr. Thurston's, viz.: That the product of the pressure in pounds per square inch and the rubbing speed in feet per minute should not exceed 50,000.

The ratio of length to diameter of journal is given as about 3.1 but a smaller ratio is used in special cases.

[1] Trans. A. S. M. E., Vol. XVIII.

Oil rings placed not further than 8 in. apart have given good results for many years. For bearings more than 1 ft. in diameter, a forced circulation of oil is recommended to carry off the heat generated.

The practice of one of the largest firms of Corliss engine builders in this country may be summarized as follows:

All bearings are lined with best Babbitt metal, cast, hammered in place and bored.

Lubrication is effected by pressure oil cups, the oil dropping from the cup into a cored pocket in the top shell of the bearing, this pocket being filled with waste.

The speed of the shafts is between 75 and 150 revolutions per minute and the allowable pressure on the journal is 140 lb. per square inch of projected area. (This is exclusive of steam pressure.)

The bearings of horizontal engines are usually four-part shells with the cap separate from the upper shell and the lower shell resting on a rib at center, which makes it self-adjustable.

The bearings of vertical engines are two-part shells.

A careful reading of the whole discussion will repay any one who has to design shaft bearings of any description.[1]

61. Heating of Journals.—The proper length of journals depends on the liability of heating.

The energy or work expended in overcoming friction is converted into heat and must be conveyed away by the material of the rubbing surfaces. If the ratio of this energy to the area of the surface exceeds a certain limit, depending on circumstances, the heat will not be conveyed away with sufficient rapidity and the bearing will heat.

The area of the rubbing surface is proportional to the projected area or product of the length and diameter of the journal, and it is this latter area which is used in calculation.

Adopting the same notation as is used in Art. 59, we have from equation (70).

$$\text{the work of friction} = \frac{\pi d N W \tan \Psi}{12} \text{ ft. lb. per min.}$$

$$\text{or} = \pi d N W \tan \Psi \text{ inch pounds.}$$

[1] Trans. A. S. M. E., Vol. XXVII.

The work per square inch of projected area is then:

$$w=\frac{\pi dNW\tan\Psi}{ld}=\frac{\pi NW\tan\Psi}{l}. \tag{a}$$

Solving in(a) for l

$$l=\frac{\pi NW\tan\Psi}{w}. \tag{b}$$

Let $\frac{w}{\pi\tan\Psi}=C$ a coefficient whose value is to be obtained by experiment; then

$$C=\frac{WN}{l} \text{ and } l=\frac{WN}{C}. \tag{71}$$

Crank pins of steam engines have perhaps caused more trouble by heating than any other form of journal. A comparison of eight different classes of propellers in the old U. S. Navy showed an average value for C of 350,000.

A similar average for the crank pins of thirteen screw steamers in the French Navy gave $C=400{,}000$.

Locomotive crank pins which are in rapid motion through the cool outside air allow a much larger value of C, sometimes more than a million.

Examination of ten modern stationary engines shows an average value of $C=200{,}000$ and an average pressure per square inch of projected area $=300$ lb.

The investigations of Professor Barr above referred to show a wide variation in the constants for the length of crank pins in stationary engines. He prefers to use the formula: $l=K\frac{HP}{L}+B$ where K and B are constants and $L=$length of stroke of engine in inches. We may put this in another form since:

$$\frac{HP}{L}=\frac{WN}{198{,}000} \text{ where } W \text{ is the total mean pressure.}$$

The formula then becomes:

$$l=K\frac{WN}{198{,}000}+B. \tag{72}$$

The value of B was found to be 2.5 in. for high-speed and 2 in. for low-speed engines, while K fluctuated from .13 to .46 with an average of .30 in the former class, and from .40 to .80 with an average of .60 in the low-speed engines.

If we adopt average values we have the following formulas for the crank pins of modern stationary engines:

$$\text{High-speed engines } l = \frac{WN}{660{,}000} + 2.5 \text{ in.} \tag{73}$$

$$\text{Low-speed engines } l = \frac{WN}{330{,}000} + 2 \text{ in.} \tag{74}$$

Compare these formulas with (71) when values of C are introduced.

In a discussion on the subject of journal bearings in 1885,[1] Mr. Geo. H. Babcock said that he had found it practicable to allow as high as 1200 lb. per square inch on crank pins while the main journal could not carry over 300 lb. per square inch without heating. One rule for speed and pressure of journal bearings used by a well-known designer of Corliss engines is to multiply the square root of the speed in feet per second by the pressure per square inch of projected area and limit this product to 350 for horizontal engines and 500 in vertical engines.

62. Experiments.—Some tests made on a steel journal 3¼ in. in diameter and 8 in. long running in a cast-iron bearing and lubricated by a sight-feed oiler, will serve to illustrate the friction and heating of such journals.

The two halves of the bearing were forced together by helical springs with a total force of 1400 lb., so that there was a pressure of 54 lb. per square inch on each half. The surface speed was 430 ft. per minute and the oil was fed at the rate of about 12 drops per minute. The lubricant used was a rather heavy automobile oil having a specific gravity of 0.925 and a viscosity of 174 when compared with water at 20° Cent.

The length of the run was two hours and the temperature of the room 70° fahr. (See Table XXXVII.)

[1] Trans. A. S. M. E., Vol. VI.

TABLE XXXVII

FRICTION OF JOURNAL BEARING

Time	Rev. per min.	Temp. fahr.	Coeff. of friction
10:03	500	69	.024
10:15	482	82	.0175
10:30	506	100	.013
10:45	506	115	.010
11:00	516	125	.010
11:15	.....	135	.004
11:30	.....	145	.004
11:45	512	147	.004
12:00	....	151	.007

Mr. Albert Kingsbury of the Westinghouse Electric and Manufacturing Company reports some valuable experiments on bearings of unusually large size and under extremely heavy pressures.[1]

The bearings were three in number; two, 9 in. in diameter and 30 in. long, supporting the shaft, and one 15 in. in diameter and 40 in. long to which the pressure was applied. These bearings are designated as *A*, *B* and *C*, *B* being the larger one. The bearings were lined with genuine Babbitt metal and scraped to fit the shaft. They were flooded with oil from a supply tank to which the oil was returned by a pump.

The runs were usually of about seven hours' duration and started with all the parts cool.

[1] Trans. A. S. M. E, Vol. XXVII.

TABLE XXXVIII

TESTS OF LARGE JOURNALS BY KINGSBURY

Test No.	Tests with heavy machine oil								Tests with paraffine oil		
	3	4	5	6	7	8	9	10	11	12	13
Load on *B*, tons	25	25	25	25	25	25	33.6	42.3	47	47	50.5
Pressure on *B*, lb. per square inch	83	83	83	83	83	83	112	141	157	157	168
Load on each *A* and *C*, tons	11.2	11.1	11.1	11.1	11.1	11.1	15.4	19.7	22.1	22.1	23.6
Pressure on *A* and *C*, lb. per square inch	86	82	82	82	82	82	114	146	164	164	175
Shaft speed: R.p.m.	300	309	506	180	179	301	454	480	946	1,243	1,286
Shaft speed: Ft. per min. *B*	1,200	1,215	1,990	708	704	1,180	1,785	1,890	3,720	4,900	5,050
Shaft speed: Ft. per min. *A* and *C*	723	730	1,190	424	422	710	1,070	1,030	2,220	2,930	3,030
Motor amperes	53	54	57	51	45.5	49.5	51	53	122	114	117
Volts	258	260	428	141	126	227.5	350	379	301	368	392
Electrical h.p.	12	18.9	32.7	9.68	7.7	15.1	24	26.9	49.3	56.3	61.6
Friction h.p. total for *A*, *B* and *C*	16	12.6	21.7	6.43	5.12	10.1	16	17.9	41.9	47.8	52.3
Friction torque lb. ft. total *A*, *B* and *C*	201	214	225	188	150	176	185	196	233	202	213
Average coeff. of friction for *A*, *B* and *C*: Starting (cold)	.12	.146	.....	.....	.....	.....	.....	.....	.....	.....	.....
Average coeff. of friction for *A*, *B* and *C*: Running	.0044	.0045	.0048	.0040	.0032	.0037	.0029	.0024	.0025	.0022	.0022

TABLE XXXVIII—*Continued*

TESTS OF LARGE JOURNALS BY KINGSBURY

Test No.		Tests with heavy machine oil								Tests with paraffine oil		
		3	4	5	6	7	8	9	10	11	12	13
Temperature centigrade:												
Atmosphere:		17	18.7	20	20.4	20	16.8	17.3	19.7	20.5	20	19
Top sleeve of bearing	*A*	48.8	44.9	54	35.8	42	44	52.2	52.9	58.7	74	97
	B	.....	.....	.....	.....	.....	.....	.....	.....	.....	67	58
	C	47.5	45.9	55	40.5	45	45.1	57.8	54.9	67.2	91	117
Oil supply		24.6	12.4	17.7	9.4	32.5	11.7	14.7	16.4	21.7	20.6	16.5
Oil drip	*A*	.....	.....	.....	.....	.....	.....	46.9	47	58	72	65
	B	.....	.....	.....	.....	.....	40.7	49.2	51.3	56	61.5	54
	C	.....	.....	.....	.....	.....	.....	46.8	49.5	59.5	66	62.5
Cooling water for bearing *B*.	Supply	7	6.3	7.6	8.1	19.2	10.9	10.9	11.8	11	12	16
	Discharge	18	13.4	14.6	16.3	32.6	37.9	47.2	48.8	38.5	69.6	69
	Rise of temp	11	7.1	7	8.2	13.4	27	36.3	37	27.5	57.6	53
Pounds oil supplied per minute.	A	.....	4.0	6.2	3.1	3.9	4.4	6.4	8.2	1.2	9.4	2.8
	B	.....	11.6	14.1	3.1	10.9	4.0	3.1	5.8	10	7.6	5.9
	C	.....	2.3	3.5	1.5	1.8	2.7	3.8	5	8.5	9.9	10
Pounds cooling water per minute to *B*		9.6	13.7	24.5	9.1	3	.55	.92	.49	6.2	.3	.3
Per cent of total heat carried from *A*, *B* and *C*.	By oil	.....	.....	.....	.....	.....	.....	63	80	61.2	61	36
	By water	22.3	19.6	20	29.5	2	3.7	5.3	2.6	10.3	.92	.76
	By air and radiation (by difference).	.....	.....	.....	.....	.....	.....	31.7	17.4	28.5	38.1	63.2

63. Strength and Stiffness of Journals.—A journal is usually in the condition of a bracket with a uniform load, and the bending moment $M=\frac{Wl}{2}$

Therefore by formula (6)

$$d=\sqrt[3]{\frac{10.2M}{S}}=\sqrt[3]{\frac{5.1Wl}{S}}$$

$$\text{or } d=1.721\sqrt[3]{\frac{Wl}{S}}. \tag{75}$$

The maximum deflection of such a bracket is

$$\Delta=\frac{Wl^3}{8EI}$$

$$I=\frac{\pi d^4}{64}=\frac{Wl^3}{8E\Delta}$$

$$d^4=\frac{64Wl^3}{8\pi E\Delta}=\frac{2.547Wl^3}{E\Delta}$$

If as is usual Δ is allowed to be $\frac{1}{100}$ in., then for stiffness

$$d=\sqrt[4]{\frac{254.7Wl^3}{E}} \tag{76}$$

$$\text{or approximately } d=4\sqrt[4]{\frac{Wl^3}{E}}. \tag{77}$$

The designer must be guided by circumstances in determining whether the journal shall be calculated for wear, for strength or for stiffness. A safe way is to design the journal by the formulas for heating and wear and then to test for strength and deflection.

Remember that no factor of safety is needed in formula for stiffness.

Note that W in formulas for strength and stiffness is not the average but the maximum load.

64. Caps and Bolts.—The cap of a journal bearing exposed to upward pressure is in the condition of a beam supported by the holding down bolts and loaded at the center, and may be designed either for strength or for stiffness.

Let: P = max. upward pressure on cap
L = distance between bolts
b = breadth of cap at center
h = depth of cap at center
Δ = greatest allowable deflection.

Strength:

$$M = \frac{Sbh^2}{6} = \frac{PL}{4}$$

$$h = \sqrt{\frac{3PL}{2bS}}. \tag{78}$$

Stiffness:

$$\Delta = \frac{WL^3}{48EI}$$

$$I = \frac{bh^3}{12} = \frac{WL^3}{48E\Delta}$$

$$h = \sqrt[3]{\frac{WL^3}{4bE\Delta}}. \tag{79}$$

If Δ is allowed to be $\frac{1}{100}$ in. and E for cast iron is taken $= 18{,}000{,}000$

then:

$$h = .01115L\sqrt[3]{\frac{W}{b}}. \tag{80}$$

The holding down bolts should be so designed that the bolts on one side of the cap may be capable of carrying safely two-thirds of the total pressure.

PROBLEMS

1. A flat car weighs 20 tons, is designed to carry a load of 40 tons more and is supported by two four-wheeled trucks, the axle journals being of wrought iron and the wheels 33 in. in diameter.

Design the journals, considering heating, wear, strength and stiffness, assuming a maximum speed of 30 miles an hour, factor of safety = 10 and $C = 300{,}000$.

2. The following dimensions are those generally used for the journals of freight cars having nominal capacities as indicated:

Capacity	Dimensions of journal
100,000 lb	4.5 by 9 in.
60,000 lb	4.25 by 8 in.
40,000 lb	3.75 by 7 in.

Assuming the weight of the car to be 40 per cent of its carrying capacity in each instance, determine the pressure per square inch of projected area and the value of the constant C {Formula (71)}.

3. Measure the crank pin of any modern engine which is accessible, calculate the various constants and compare them with those given in this chapter.

4. Design a crank pin for an engine under the following conditions:

Diameter of piston	=28 in.
Maximum steam pressure	=90 lb. per square inch.
Mean steam pressure	=40 lb. per square inch.
Revolutions per minute	=75.

Determine dimensions necessary to prevent wear and heating and then test for strength and stiffness.

5. Design a crank pin for a high-speed engine having the following dimensions and conditions:

Diameter of piston.	=14 in.
Maximum steam pressure	=100 lb. per square inch.
Mean steam pressure	=50 lb. per square inch.
Revolutions per minute	=250.

6. Make a careful study and sketch of journals and journal bearings on each of the following machines and analyze as to (a) Materials. (b) Adjustment. (c) Lubrication.

a. An engine lathe.
b. A milling machine.
c. A steam engine.
d. An electric generator or motor.

7. Sketch at least two forms of oil cup used in the laboratories and explain their working.

8. The shaft journal of a vertical engine is 4 in. in diameter by 6 in. long. The cap is of cast iron, held down by 4 bolts of wrought iron, each 5 in. from center of shaft, and the greatest vertical pressure is 12,000 lb.

Calculate depth of cap at center for both strength and stiffness, and also the diameter of bolts.

9. Investigate the strength of the cap and bolts of some pillow block whose dimensions are known, under a pressure of 500 lb. per square inch of projected area.

10. The total weight on the drivers of a locomotive is 64,000 lb. The drivers are four in number, 5 ft. 2 in. in diameter, and have journals 7½ in. in diameter.

Determine horse-power consumed in friction when the locomotive is running 50 miles an hour, assuming tan $\Psi = .05$.

65. Step-Bearings.—Any bearing which is designed to resist end thrust of the shaft rather than lateral pressure is denomi-

nated a step or thrust bearing. These are naturally most used on vertical shafts, but may be frequently seen on horizontal ones as for example on the spindles of engine lathes, boring machines and milling machines.

Step-bearings may be classified according to the shape of the rubbing surface, as flat pivots and collars, conical pivots, and conoidal pivots of which the Schiele pivot is the best known. When a step-bearing on a vertical shaft is exposed to great pressure or speed it is sometimes lubricated by an oil tube coming up from below to the center of the bearing and connecting with a stand pipe or force-pump. The oil entering at the center is distributed by centrifugal force.

66. Friction of Pivots or Step-bearings.—Flat Pivots.

Let W = weight on pivot
d_1 = outer diameter of pivot
p = intensity of vertical pressure
T = moment of friction
f = coefficient of friction = $tan\ \varphi$.

We will assume p to be a constant which is no doubt approximately true.

$$\text{Then } p = \frac{W}{area} = \frac{4W}{\pi d_1^2}$$

Let r = the radius of any elementary ring of a width = dr,
then area of element = $2\pi r dr$
Friction of element = $fp \times 2\pi r dr$
Moment of friction of element = $2fp\pi r^2 dr$

and

$$T = 2fp\pi \int_0^{d_1} r^2 dr \qquad \text{(a)}$$

$$\text{or } T = 2fp\pi \frac{r^3}{3} = 2fp\pi \frac{d_1^3}{24}$$

$$= \frac{2f\pi d_1^3}{24} \times \frac{4W}{\pi d_1^2} = \frac{1}{3} W f d_1. \qquad (81)$$

The great objection to this form of pivot is the uneven wear due to the difference in velocity between center and circumference.

67. Flat Collar.

Let d_2 = inside diameter

Integrating as in equation (a) above, but using limits

$\frac{d_1}{2}$ and $\frac{d_2}{2}$ we have

$$T = 2fp\pi\frac{d_1^3 - d_2^3}{24}.$$

In this case

$$p = \frac{4W}{\pi(d_1^2 - d_2^2)}$$

and

$$T = \tfrac{1}{3}Wf\frac{d_1^3 - d_2^3}{d_1^2 - d_2^2}. \qquad (82)$$

68. Conical Pivot.

Let a = angle of inclination to the vertical.

As in the case of a flat ring the intensity of the vertical pressure is

$$p = \frac{4W}{\pi(d_1^2 - d_2^2)}$$

and the vertical pressure on an elementary ring of the bearing surface is

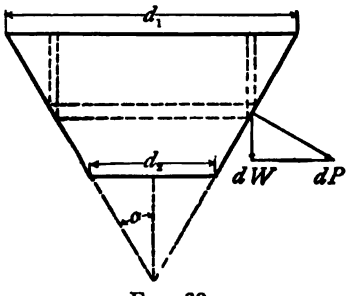

FIG. 60.

$$dW = \frac{4W}{\pi(d_1^2 - d_2^2)} \times 2\pi r dr = \frac{8Wrdr}{d_1^2 - d_2^2}.$$

As seen in Fig. 60 the normal pressure on the elementary ring is

$$dP = \frac{dW}{\sin\alpha} = \frac{8Wrdr}{(d_1^2 - d_2^2)\sin\alpha}.$$

The friction on the ring is fdP and the moment of this friction is

$$dT = frdP = \frac{8Wfr^2dr}{(d_1^2 - d_2^2)\sin\alpha}$$

$$T = \frac{8Wf}{(d_1^2 - d_2^2)\sin\alpha}\int_{\frac{d_2}{2}}^{\frac{d_1}{2}} r^2dr$$

$$= \frac{1}{3}\frac{Wf}{\sin\alpha}\,\frac{d_1^3 - d_2^3}{d_1^2 - d_2^2}. \tag{83}$$

As α approaches $\frac{\pi}{2}$ the value of T approaches that of a flat ring, and as α approaches 0 the value of T approaches ∞.

If $d_2 = 0$ we have

$$T = \frac{1}{3}\frac{Wfd}{\sin\alpha}. \tag{84}$$

The conical pivot also wears unevenly, usually assuming a concave shape as seen in profile.

69. Schiele's Pivot.—By experimenting with a pivot and bearing made of some friable material, it was shown that the outline tended to become curved as shown in Fig. 62. This led to a mathematical investigation which showed that the curve would be a tractrix under certain conditions.

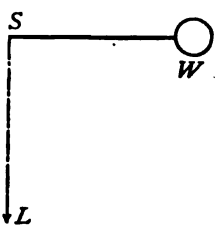

FIG. 61.

This curve may be traced mechanically as shown in Fig. 61.

Let the weight W be free to move on a plane. Let the string SW be kept taut and the end S moved along the straight line SL. Then will a pencil attached to the center of W trace on the plane a tractrix whose axis is SL.

In Fig. 62. let SW = length of string $= r_1$ and let P be any point in the curve. Then it is evident that the tangent PQ to the curve is a constant and $= r_1$

Also $$\frac{r}{\sin\theta} = r_1.$$

Let a pivot be generated by revolving the curve around its axis SL. As in the case of the conical pivot it can be proved that the normal pressure on an element of convex surface is

$$dP = \frac{8Wrdr}{(d_1^2 - d_2^2)\sin\theta}. \qquad \text{(a)}$$

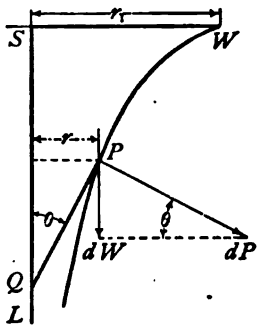

FIG. 62.

Let the normal wear of the pivot be assumed to be proportional to this normal pressure and to the velocity of the rubbing surfaces, *i.e.* normal wear proportional to pr, then is the vertical wear proportional to $\frac{pr}{\sin\theta}$. But $\frac{r}{\sin\theta}$ is a constant, therefore the vertical wear will be the same at all points. This is the characteristic feature and advantage of this form of pivot.

As shown in equation (a)

$$dP = \frac{8Wr_1dr}{d_1^2 - d_2^2}$$

$$\therefore dT = \frac{8Wfr_1rdr}{d_1^2 - d_2^2}$$

and

$$T = \frac{8Wfr_1}{d_1^2 - d_2^2}\,\frac{r_1^2 - r_2^2}{2} = \frac{Wfd_1}{2}. \qquad (85)$$

T is thus shown to be independent of d_2 or of the length of pivot used.

This pivot is sometimes wrongly called antifriction. As will be seen by comparing equations (81) and (85) the moment of friction is 50 per cent greater than that of the common flat pivot.

The distinct advantage of the Schiele pivot is in the fact that it maintains its shape as it wears and is self-adjusting. It is an expensive bearing to manufacture and is seldom used on that account.

It is not suitable for a bearing where most of the pressure is sideways.

Mr. H. G. Reist of the General Electric Company, in the paper before alluded to, explains the practice of that company in regard to large step bearings for steam turbine work.

The pressures and speeds allowed are the same as already quoted for cylindrical bearings. The bearings are usually submerged in oil and are provided with radial grooves in the step journal to force the oil over the entire surface.

Two bearings are sometimes employed, one above the other, one being supported by a spring so as to take about one-half the load.

If pressure and speed are great, the weight is supported on a film of oil or water maintained by pressure. A circular recess about half the diameter of the bearing disc allows the oil to distribute. The distance that the bearing is raised by the oil pressure is from .003 to .005 in. and the pressures employed vary from 250 to 800 lb. per square inch according to circumstances. The initial pressure to raise the step will be about 25 per cent greater. The following figures are quoted as examples of ordinary practice.

Weight of rotor	9,800	53,000	187,000
Revolutions per minute	1,800	750	500
Diameter of bearing	9.75	16	22.5
Pressure of oil	180	420	650
Quantity of oil in gallons per minute	1	3.5	6

70. Multiple Bearings.—To guard against abrasion in flat pivots a series of rubbing surfaces which divide the wear is sometimes provided. Several flat discs placed beneath the pivot and turning indifferently may be used. Sometimes the discs are made alternately of a hard and a soft material. Bronze, steel and raw hide are the more common materials.

Notice in this connection the button or washer at the outer end of the head spindle of an engine lathe and the loose collar on the main journal of a milling machine. See Figs. 54 and 55. Pivots are usually lubricated through a hole at the center of the bearing and it is desirable to have a pressure head on the oil to force it in.

The hydraulic foot step sometimes used for the vertical shafts of turbines is in effect a rotating plunger supported by water pressure underneath and so packed in its bearing as to allow a

slight leakage of water for cooling and lubricating the bearing surfaces.

The compound thrust bearing generally used for propeller shafts consists of a number of collars of the same size forged on the shafts at regular intervals and dividing the end thrust between them, thus reducing the intensity of pressure to a safe limit without making the collars unreasonably large.

Fig. 63 shows the shape of the horseshoe rings for bearing surface arranged for independent water cooling.

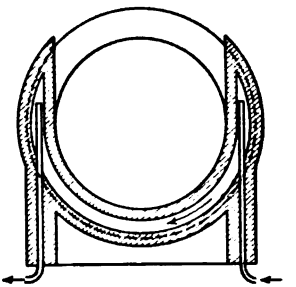

FIG. 63.

A safe value for p the intensity of pressure is, according to Whitham, 60 lb. per square inch for high-speed engines.

A table given by Prof. Jones in his book on Machine Design shows the practice at the Newport News ship-yards on marine engines of from 250 to 5000 horse-power. The outer diameter of collars is about one and one-half times the diameter of the shafts in each case and the number of collars used varies from 6 in the smallest engine to 11 in the largest. The pressure per square inch of bearing surface varies from 18 to 46 lb. with an average value of about 32 lb.

Mr. G. W. Dickie gives some data concerning modern naval practice in the design of thrust bearings. The usual method of determining the pressure is to assume two-thirds of the indicated horse-power and calculate the pressure from that by the formula:

$$P = I\ HP \frac{2 \times 60 \times 33000}{3 \times 6080\ S} \tag{86}$$

where P = pressure on thrust bearing S = speed of ship in knots.

Mr. Dickie quotes examples from modern practice for both naval and merchant service. These are assembled in Table XXXIX.

All of these bearings except No. 4 were supplied with water circulation through each horseshoe. No. 3 required especial care when running on account of the high rubbing velocity.

TABLE XXXIX

PROPERTIES OF MARINE THRUST BEARINGS (DICKIE)

Data	1	2	3	4
	Armored cruiser	Protected cruiser	Torpedo boat destroyer	Passenger steamer
Speed, knots	22	22.5	28	21
Surface of ring (square inch)	1,188	891	581	2,268
Horse-power, one engine	11,500	6,800	4,200	15,000
Total thrust (pounds)	112,700	89,000	33,600	154,500
Pressure per square inch (pounds)	95	100	58	68.1
Mean rubbing speed (feet per minute)	642	610	827	504

PROBLEMS

1. Design and draw to full size a Schiele pivot for a water wheel shaft 4 in. in diameter, the total length of the bearing being 3 in.

Calculate the horse-power expended in friction if the total vertical pressure on the pivot is two tons and the wheel makes 150 revolutions per minute and assuming $f = .25$ for metal on wet wood.

2. Compare the friction of the pivot in Prob. 1, with that of a flat collar of the same projected area and also with that of a conical pivot having $\alpha = 30$ degrees.

3. Design a compound thrust bearing for a propeller shaft the diameters being 14 and 21 in., the total thrust being 80,000 lb. and the pressure 60 lb. per square inch.

Calculate the horse-power consumed in friction and compare with that developed if a single collar of same area had been used. Assume $f = .05$ and revolutions per minute = 120.

REFERENCES

Machine Design. Low and Bevis, Chapter IX.
Steam Engine. Ripper, Chapter XVII.
Large Experimental Bearing. *Am. Mach.*, March 15, 1906.
Experiments on Bearings. *Am. Mach.*, Oct. 18, 1906.
Lubrication of Bearings. Tr. A. S. M. E., Vol. X, p. 810; Vol. XIII, p. 374.
Lubrication. *Eng. Mag.*, Dec., 1908.
Bearings, a Symposium. Tr. A. S. M. E., Vol. XXVII, p. 420.

CHAPTER VIII

BALL AND ROLLER BEARINGS

71. General Principles.—The object of interposing a ball or roller between a journal and its bearing, is to substitute rolling for sliding friction and thus to reduce the resistance. This can be done only partially and by the observance of certain principles. In the first place it must be remembered that each ball can roll about but one axis at a time; that axis must be determined and the points of contact located accordingly.

Secondly, the pressure should be approximately normal to the surfaces at the points of contact.

Finally it must be understood, that on account of the contact surfaces being so minute, a comparatively slight pressure will cause distortion of the balls and an entire change in the conditions.

72. Journal Bearings.—These may be either two, three or four point, so named from the number of points of contact of each ball.

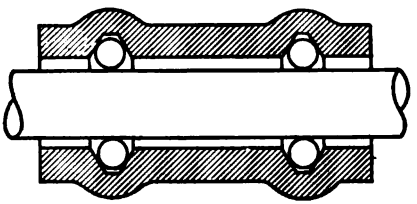

FIG. 64.

The axis of the ball may be assumed as parallel or inclined to the axis of the journal and the points of contact arranged accordingly. The simplest form consists of a plain cylindrical journal running in a bearing of the same shape and having rings of balls interposed. The successive rings of balls should be separated by thin loose collars to keep them in place. These collars are a source of rubbing friction, and to do away with them the balls are sometimes run in grooves either in journal, bearing or both.

Fig. 64 shows a bearing of this type, there being three points of contact and the axis of ball being parallel to that of journal.

The bearings so far mentioned have no means of adjustment for wear. Conical bearings, or those in which the axes of the balls meet in a common point, supply this deficiency. In designing this class of bearings, either for side or end thrust, the inclination of the axis is assumed according to the obliquity desired and the points of contact are then so located that there shall be no slipping.

Fig. 65 illustrates a common form of adjustable or cone bearing and shows the method of designing a three-point contact. *A C* is the axis of the cone, while the shaded area is a section of the cup, so called. Let *a* and *b* be two points of contact between ball and cup. Draw the line *a b* and produce to cut axis in *A*. Through the center of ball draw the line *A B*; then will this be the axis of rotation of the ball and *a c*, *b d* will be the projections of two circles of rotation. As the radii of these circles have the same ratio as the radii of revolution *a n*, *b m*, there will be no slipping and the ball will roll as a cone inside another cone. The exact location of the third point of contact is not material. If it were at *c*, too much pressure would come on the cup at *b*; if at *d* there would be an excess of pressure at *a*, but the rolling would be correct in either case. A convenient method is to locate *p* by drawing *A D* tangent to ball circle as shown. It is recommended, however, that the two opposing surfaces at *p* and *b* or *a* should make with each other an angle of not less than 25 degrees to avoid sticking of the ball.

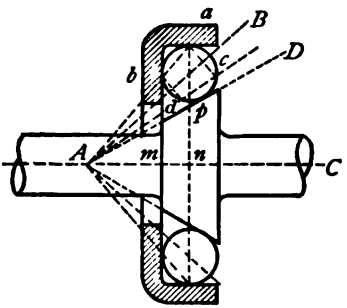

FIG. 65.

To convert the bearing just shown to four-point contact, it would only be necessary to change the one cone into two cones tangent to the ball at *c* and *d*.

To reduce it to two-point contact the points *a* and *b* are brought together to a point opposite *p*. As in this last case the ball would not be confined to a definite path it is customary to make one or both surfaces concave conoids with a radius about three-fourths the diameter of the ball. See Fig. 66.

73. Step-bearings.—The same principles apply as in the preceding article and the axis and points of contact may be varied in the same way. The most common form of step-bearing consists of two flat circular plates separated by one or more rings of balls. Each ring must be kept in place by one or more loose retaining collars, and these in turn are the cause of some sliding

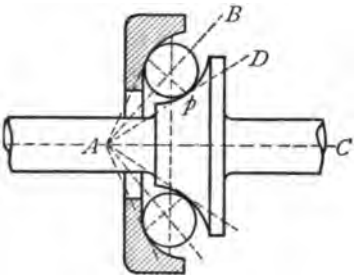

FIG. 66.

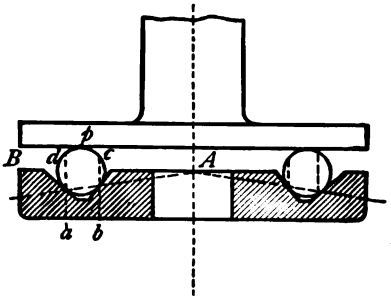

FIG. 67.

friction. This is a bearing with two-point contact and the balls turning on horizontal axes. If the space between the plates is filled with loose balls, as is sometimes done, the rubbing of the balls against each other will cause considerable friction.

To guide the balls without rubbing friction three-point contact is generally used.

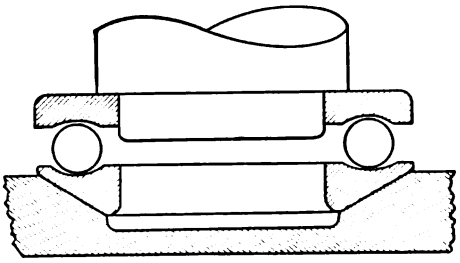

FIG. 68.

Fig. 67 illustrates a bearing of this character. The method of design is shown in the figure, the principle being the same as in Fig. 65. By comparing the lettering of the two figures the similarity will be readily seen.

This last bearing may be converted to four-point contact by making the upper collar of the same shape as the lower.

What is practically a two-point contact with some of the advantages of four point is attained by the use of curved races for the balls as in Fig. 68.

To insure even distribution of the load, the lower ring is supported on a self-adjusting spherical collar. The radii of the curved races should not be less than two-thirds the diameter of the balls.

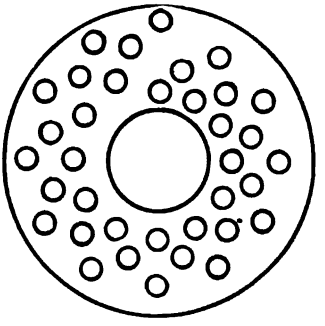

FIG. 69.

To guide the balls in two-point contact use is sometimes made of a cage ring, a flat collar drilled with holes just a trifle larger than the balls and disposing them either in spirals or in irregular order. See Fig. 69.

This method has the advantage of making each ball move in a path of different radius thus securing more even wear for the plates.

74. Materials and Wear.—The balls themselves are always made of steel, hardened in oil, tempered and ground. They are usually accurate to within one ten-thousandth of an inch. The plates, rings and journals must be hardened and ground in the same way and perhaps are more likely to wear out or fail than the balls. A long series of experiments made at the Case School of Applied Science on the friction and endurance of ball step-bearings showed some interesting peculiarities.

Using flat plates with one circle of quarter-inch balls it was found that the balls pressed outward on the retaining ring with such force as to cut and indent it seriously. This was probably due to the fact that the pressure slightly distorted the balls and changed each sphere into a partial cylinder at the touching points. While of this shape it would tend to roll in a straight line or a tangent to the circle. Grinding the plates slightly convex at an angle of 1 to 1½ degrees obviated the difficulty to a certain extent. Under even moderately heavy loads the continued

rolling of the ring of balls in one path soon damaged the plates to such an extent as to ruin the bearing.

A flat bearing filled with loose balls developed three or four times the friction of the single ring and a three-point bearing similar to that in Fig. 68 showed more than twice the friction of the two point bearing.

A flat ring cage such as has already been described was the most satisfactory as regards friction and endurance.

The general conclusions derived from the experiments were that under comparatively light pressures the balls are distorted sufficiently to disturb seriously the manner of rolling and that it is the elasticity and not the compressive strength of the balls which must be considered in designing bearings.

75. Design of Bearings.—Figures on the direct crushing strength of steel balls have little value for the designer. For instance it has been proved by numerous tests that the average crushing strengths of ¼-in. and ⅜-in. balls are about 7500 lb. and 15,000 lb. respectively. Experiments made by the writer show that a ¼-in. ball loses all value as a transmission element on account of distortion, at any load of more than 100 lb.

Prof. Gray states, as a conclusion from some experiments made by him, that not more than 40 lb. per ball should be allowed for ⅜-in. balls.

This distortion doubtless accounts for the failure of theoretically correct bearings to behave as was expected of them.

Mr. Charles R. Pratt reports the limit of work for ½-in. balls in thrust bearings to be 100 lb. per ball at 700 revolutions per minute and 6 in. diameter circle of rotation.

Mr. W. S. Rogers gives the maximum load for a 1-in. ball as 1000 lb. and for a ½-in. ball as 200 lb.

76. Endurance of Ball Bearings.—For complete and reliable data on the strength and endurance of ball bearings, reference is made to a paper by Mr. Henry Hess and to translations of the work of Professor Stribeck.[1]

The formulas which follow are derived mainly from the sources mentioned.

[1] Trans. A. S. M. E., Vol. XXIX.

Ball bearings do not fail from wear but, as already noticed, from distortion and injury at the contact points. The use of a curved race, as in Fig. 68, will increase the durability, because the contact point is reinforced by the material at either side.

In a journal bearing having one ring of balls, one-fifth of the total number of balls is considered as carrying the load. In a plain journal, the unit is the square inch of projected area. In a ball bearing, for projected area is substituted the square of ball diameter multiplied by one-fifth the number of balls.

Let d = diameter of ball in inches
n = number of balls in ring
W = total load on balls
p = safe load on one ball.

Then $$p = \frac{5W}{n} = kd^2 \qquad \text{(a)}$$

where k is a constant depending on the material and the type of bearing.

From equation (a):

$$W = k\frac{nd^2}{5} \qquad (87)$$

where $\frac{nd^2}{5}$ corresponds to the (ld) or projected area of the plain bearing. The values of k are as follows:

Shape of race	Hardened steel balls	Hardened steel alloy balls
Flat	500 to 700	700 to 1,000
Curved to radius $= \frac{3}{2}d$	1,500	2,000

The load capacity of balls may be affected by various conditions; lack of uniformity in the hardness of either balls or race will reduce the capacity; lack of uniformity in size of balls is also a source of inefficiency; sudden variations of speed cause shocks which impair the capacity of the bearing.

The ball bearing is of somewhat the same nature as a chain or a gear and weakness of any unit leads to the destruction of the whole.

The average coefficient of friction of a good ball bearing is about 0.0015.

Speeds of over 1500 revolutions per minute are impracticable.

77. Roller Bearings.—The principal disadvantage of ball bearings lies in the fact that contact is only at a point and that even moderate pressure causes excessive distortion and wear. The substitution of cylinders or cones for the balls is intended to overcome this difficulty.

The simplest form of roller bearing consists of a plain cylindrical journal and bearing with small cylindrical rollers interposed instead of balls. There are two difficulties here to be overcome. The rollers tend to work endways and rub or score whatever retains them. They also tend to twist around and become unevenly worn or even bent and broken, unless held in place by some sort of cage. In short they will not work properly unless guided and any form of guide entails sliding friction. The cage generally used is a cylindrical sleeve having longitudinal slots which hold the rollers loosely and prevent their getting out of place either sideways or endways.

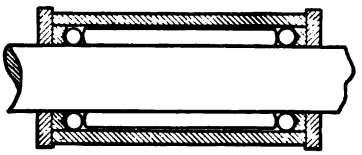

Fig. 70.

The use of balls or convex washers at the ends of the rollers has been tried with some degree of success. See Fig. 70. Large rollers have been turned smaller at the ends and the bearings then formed allowed to turn in holes bored in revolving collars. These collars must be so fastened or geared together as to turn in unison.

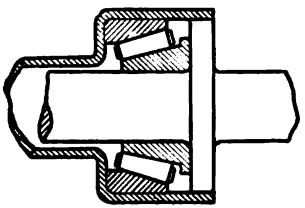

Fig. 71.

78. Grant Roller Bearing.—The Grant roller is conical and forms an intermediate between the ball and the cylindrical roller having some of the advantages of each. The principle is much the same as in the adjustable ball bearing, Fig. 65, rolling cones being substituted for balls, Fig. 71. The inner cone turns loose on the spindle. The conical rollers are held in position

by rings at each end, while the outer or hollow cone ring is adjustable along the axis.

Two sets of cones are used on a bearing, one at each end to neutralize the end thrust, the same as with ball bearings.

79. Hyatt Rollers.—The tendency of the rollers to get out of alignment has been already noticed. The Hyatt roller is intended by its flexibility to secure uniform pressure and wear under such conditions. It consists of a flat strip of steel wound spirally about a mandrel so as to form a continuous hollow cylinder. It is true in form and comparatively rigid against compression, but possesses sufficient flexibility to adapt itself to slight changes of bearing surface.

Experiments made by the Franklin Institute show that the Hyatt roller possesses a great advantage in efficiency over the solid roller.

Testing $\frac{3}{4}$-in. rollers between flat plates under loads increasing to 550 lb. per linear inch of roller developed coefficients of friction for the Hyatt roller from 23 to 51 per cent less than for the solid roller. Subsequent examination of the plates showed also a much more even distribution of pressure for the former.

A series of tests were conducted by the writer in 1904–05 to determine the relative efficiency of roller bearings, as compared with plain cast-iron and Babbitted bearings under similar conditions.[1] The bearings tested had diameters of $1\frac{15}{16}$, $2\frac{3}{16}$, $2\frac{7}{16}$, and $2\frac{15}{16}$ in. and lengths approximately four times the diameters. In the first set of experiments Hyatt roller bearings were compared with plain cast-iron sleeves, at a uniform speed of 480 revolutions per minute and under loads varying from 64 to 264 lb. The cast-iron bearings were copiously oiled.

As the load was gradually increased, the value of f the coefficient of friction remained nearly constant with the plain bearings, but gradually decreased in the case of the roller bearings. Table XL gives a summary of this series of tests.

The relatively high values of f in the $2\frac{3}{16}$ and $2\frac{15}{16}$ roller bearings were due to the snugness of the fit between the journal and the bearing, and show the advisability of an easy fit as in ordinary bearings.

[1] *Mchy.*, N. Y., Oct., 1905.

TABLE XL

COEFFICIENTS OF FRICTION FOR ROLLER AND PLAIN BEARINGS

Diameter of journal	Hyatt bearing			Plain bearing		
	Max.	Min.	Ave.	Max.	Min.	Ave.
$1\frac{11}{16}$	.036	.019	.026	.160	.099	.117
$2\frac{3}{16}$	.052	.034	.040	.129	.071	.094
$2\frac{7}{16}$	.041	.025	.030	.143	.076	.104
$2\frac{15}{16}$	.053	.049	.051	.138	.091	.104

The same Hyatt bearings were used in the second set of experiments, but were compared with the McKeel solid roller bearings and with plain Babbitted bearings freely oiled. The McKeel bearings contained rolls turned from solid steel and guided by spherical ends fitting recesses in cage rings at each end. The cage rings were joined to each other by steel rods parallel to the rolls. The journals were run at a speed of 560 revolutions per minute and under loads varying from 113 to 456 lb. Table XLI gives a summary of the second series of tests.

TABLE XLI

COEFFICIENTS OF FRICTION FOR ROLLER AND PLAIN BEARINGS

Diam. of journal	Hyatt bearing			McKeel bearing			Babbitt bearing		
	Max.	Min.	Ave.	Max.	Min.	Ave.	Max.	Min.	Ave.
$1\frac{1}{16}$	.032	.012	.018	.033	.017	.022	.074	.029	.043
$2\frac{3}{16}$	.019	.011	.014	.....	.....	.....	.088	.078	.082
$2\frac{7}{16}$	.042	.025	.032	.028	.015	.021	.114	.083	.096
$2\frac{15}{16}$	.029	.022	.025	.039	.019	.027	.125	.089	.107

The variation in the values for the Babbitted bearing is due to the changes in the quantity and temperature of the oil. For

heavy pressures it is probable that the plain bearing might be more serviceable than the others. Notice the low values for f in Table XXXVII.

Under a load of 470 lb. the Haytt bearing developed an end thrust of 13.5 lb. and the McKeel one of 11 lb.

This is due to a slight skewing of the rolls and varies, sometimes reversing in direction.

If roller bearings are properly adjusted and not overloaded a saving of from two thirds to three-fourths of the friction may be reasonably expected.

Professor A. L. Williston reports some tests of Hyatt roller bearings made at Pratt Institute in 1904. The journals were 1.5 in. diameter and 4 in. long. The speeds varied from 128 to 585 revolutions per minute. Both the roller and the plain bearings were lubricated with the same grade of oil. The total load on the bearing was gradually increased from 1900 lb. to 8300 lb. The average friction of each bearing was as given in the table.

TABLE XLII

COEFFICIENTS OF FRICTION FOR ROLLER AND PLAIN BEARINGS

Revolutions per minute	Hyatt	Plain cast iron	Plain bronze
130	.0114	.0548	.0576
302–320	.0099	.0592	.0661
410–585	.0147	.0683	.140

In several instances the cast-iron bearing seized under pressures above 5000 lb. while the bronze bearing proved unreliable at pressures over 3000 lb.

The roller bearing was further tested with total pressures from 10,800 lb. to 23,500 lb. at 215 revolutions per minute and the coefficient found to vary from .0094 to .0076.

80. Roller Step-bearings.—In article 74 attention was called to the fact that the balls in a step-bearing under moderately heavy pressures tend to become cylinders or cones and to roll

accordingly. This has suggested the use of small cones in place of the balls, rolling between plates one or both of which are also conical. A successful bearing of this kind with short cylinders in place of cones is used by the Sprague-Pratt Elevator Co., and is described in the *American Machinist* for June 27, 1901. The rollers are arranged in two spiral rows so as to distribute the wear evenly over the plates and are held loosely in a flat ring cage. This bearing has run well in practice under loads double those allowable for ball bearings, or over 100 lb. per roll for rolls ½ in. in diameter and ¼ in. long.

Fig. 72 illustrates a bearing of this character. Collars similar to this have been used in thrust bearings for propeller shafts.

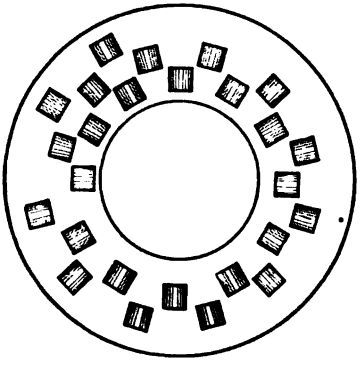

FIG. 72.

81. Design of Roller Bearings.—Further reference is here made to the discussion mentioned in Art. 76 for information as to the design and construction of roller bearings. As in the case of ball bearings, one-fifth of all the rolls is assumed to carry the load and the area used for comparison may be expressed by the formula:

$$a = \frac{nld}{5}$$

where,

n = number of rolls
d = diameter of rolls in inches
l = length of rolls in inches.

The allowable pressure per roll is,

$$p = kld \tag{a}$$

where k is a constant depending on the material and shape of the roll. The whole load on the bearing is

$$W = k\frac{nld}{5}. \tag{88}$$

Mr. Frank Mossberg gives the following values of the safe load

for roller bearings of the Mossberg type. These bearings have small solid steel rolls hardened to a spring temper and guided by bronze cages similar to those mentioned in Art. 77. The journal is tempered to a medium hardness and the box is of high carbon steel and very hard.

TABLE XLIII

SAFE LOAD ON MOSSBERG ROLLER BEARINGS

Length of journal, inches	Diameter of journal, inches	Diameter of rolls, inches	Number of rolls	Safe load on journal, pounds	Value of $k = \frac{5W}{nld}$
l		d	n	W	
3	2	$\frac{1}{4}$	20	3,500	1,170
3.75	2.5	$\frac{5}{16}$	22	7,000	1,350
4.5	3	$\frac{3}{8}$	22	13,000	1,750
6	4	$\frac{7}{16}$	24	24,000	1,900
7.5	5	$\frac{9}{16}$	24	37,000	1,830
9	6	$\frac{11}{16}$	24	50,000	1,690
10.5	7	$\frac{13}{16}$	22	70,000	1,860
12	8	$\frac{7}{8}$	22	90,000	1,950
13.5	9	1	24	115,000	1,770
18	12	$1\frac{1}{4}$	26	175,000	1,500
22.5	15	$1\frac{3}{8}$	28	255,000	1,470
27	18	$1\frac{3}{8}$	32	325,000	1,370
30	20	$1\frac{1}{2}$	34	400,000	1,300
36	24	$1\frac{1}{2}$	38	576,000	1,400
				Average	1,590

It will be noticed that k is not constant in Table XLIII, being greatest for the intermediate sizes. The average value is about

$$k = 1600.$$

Smith and Marx give:

$$k = 1000 \text{ for hardened steel}$$
$$k = 400 \text{ for cast iron.}$$

Mr. Mossberg considers one-third the entire number of rolls as bearing the load. This would make the formula read:

$$W = k\frac{nld}{3} \tag{89}$$

with an average value of $k = 960$.

The roller step-bearings of the same manufacture have small conical rolls with an angle of not over 6 or 7 degrees; retaining rings or cages keep the rolls in correct positions.

The bearing collars are of very hard high carbon steel and the rolls as in the journal bearing have a medium or spring temper. Table XLIV gives the proportions and safe loads.

TABLE XLIV

SAFE LOADS ON MOSSBERG ROLLER STEP-BEARINGS

Diameter of shaft, inches, D	Number of rolls, n	Area of collar, square inches	Safe load in pounds = W	
			75 revolutions per minute	150 revolutions per minute
2.25	30	10	19,000	9,500
3.25	30	20	40,000	20,000
4.25	30	35	70,000	35,000
5.25	30	54	108,000	56,000
6.50	30	78	125,000	62,000
8.50	32	132	200,000	100,000
9.50	32	162	300,000	150,000

The formulas for pressure on rolls would be the same as in journal bearings except that the full number of rolls—n—would be effective at all times.

$$W = knld \tag{90}$$

where l is the length of roll and d is its mean diameter.

The table gives no information as to the proportions of the roll.

The following proportions are scaled from a cut of the bearing:

Angle of cone about 7 degrees.

$$l = 0.36\ D \qquad d = 0.1D \qquad ld = .036\ D^2.$$

where

D = diameter of shaft
l = working length of roll
d = mean diameter of roll.

TABLE XLV

VALUES OF k FOR ROLLER THRUST BEARING

D	l	d	ld	nld	Values of $k = \frac{W}{nld}$	
					75 revolutions per minute	150 revolutions per minute
2.25	0.81	.225	0.18	5.46	3,490	1,745
3.25	1.17	.325	0.38	11.4	3,500	1,750
4.25	1.53	.425	0.65	19.5	3,590	1,795
5.25	1.89	.525	0.99	29.7	3,640	1,820
6.50	2.34	.650	1.52	45.6	2,740	1,370
8.50	3.06	.850	2.60	83.3	2,400	1,200
9.50	3.42	.950	3.25	104.0	2,880	1,440

Space forbids reference to all of the many varieties of ball and roller bearings shown in manufacturers' catalogues. These are all subject to the laws and limitations mentioned in this chapter,

While such bearings will be used more and more in the future, it must be understood that extremely high speeds or heavy pressures are unfavorable and in most cases prohibitive.

Furthermore, unless a bearing of this character is carefully designed and well constructed it will prove to be worse than useless.

REFERENCES

Tests of Roller Bearings. *Mchy.*, Oct., 1905.
Tests of Ball Bearings. *Am. Mach.*, Mar. 15, 1906, Jan. 23, 1908.
Pressure on Balls. *Am. Mach.*, July 12, 1906.
Discussion on Ball Bearings. *Power*, July, 1907.
Design of Roller Bearings. *Power*, Jan. 14, 1908.
Recent Progress in Ball Bearings. *Am. Mach.*, Nov. 7, 1907.
Symposium. Tr. A. S. M. E., Vol. XXVII, p. 442.
A Very Complete Discussion. Tr. A. S. M. E., Vol. XXIX, p. 367.

CHAPTER IX

SHAFTING, COUPLINGS AND HANGERS

82. Strength of Shafting.

Let D = diameter of the driving pulley or gear
N = number revolutions per minute
P = force applied at rim
T = twisting moment.

The distance through which P acts in one minute is πDN in. and work $= P\pi DN$ in. lb. per minute.

But $\frac{PD}{2} = T$ the moment, and $2\pi N$ = the angular velocity.

$\therefore$ work = moment × angular velocity.

One horse-power = 33,000 ft. lb. per min.
= 396,000 in. lb. per min.

$$\therefore HP = \frac{P\pi DN}{396000} = \frac{2\pi TN}{396000}$$

or
$$HP = \frac{TN}{63025} \tag{91}$$

also
$$T = \frac{63025\ HP}{N} \tag{92}$$

$$P = \frac{126050\ HP.}{DN} \tag{93}$$

The general formula for a circular shaft exposed to torsion alone is

$$d = \sqrt[3]{\frac{5.1\ T}{S}}.$$

But
$$T = \frac{63025\ HP}{N} \text{ by (92)}$$

where N = no. rev. per min.

Substituting in formula for d

$$d = \sqrt[3]{\frac{321000\ HP}{SN}} \text{ nearly.} \tag{94}$$

S may be given the following values:

45,000 for common turned shafting.
50,000 for cold rolled iron or soft steel.
65,000 for machinery steel.

It is customary to use factors of safety for shafting as follows:

Headshafts or prime movers	15
Line shafting	10
Short counters	6

The large factor of safety for head shafts is used not only on account of the severe service to which such shafts are exposed, but also on account of the inconvenience and expense attendant on failure of so important a part of the machinery. The factor of safety for line shafting is supposed to be large enough to allow for the transverse stresses produced by weight of pulleys, pull of belts, etc., since it is impracticable to calculate these accurately in most cases.

Substituting the values of S and introducing factors of safety, we have the following formulas for the safe diameters of the various kinds of shafts.

TABLE XLVI

DIAMETERS OF SHAFTING

Kind of shaft	Material		
	Common iron	Soft steel	Mach'y steel
Head shaft	$4.75\sqrt[3]{\frac{HP}{N}}$	$4.58\sqrt[3]{\frac{HP}{N}}$	$4.20\sqrt[3]{\frac{HP}{N}}$
Line shaft	$4.15\sqrt[3]{\frac{HP}{N}}$	$4.00\sqrt[3]{\frac{HP}{N}}$	$3.67\sqrt[3]{\frac{HP}{N}}$
Counter shaft	$3.50\sqrt[3]{\frac{HP}{N}}$	$3.38\sqrt[3]{\frac{HP}{N}}$	$3.10\sqrt[3]{\frac{HP}{N}}$

The Allis-Chalmers Co. base their tables for the horse power of wrought iron or mild steel shafting on the formula $HP = cd^3N$ where c has the following values:

	c
Heavy or main shafting	.008
Shaft carrying gears	.010
Light shafting with pulleys	.013

This is equivalent to using values of S as 2570 lb., 3200 lb. and 4170 lb. per square inch in the respective classes—and would give for coefficients in Table XLVI the numbers 5, 4.64 and 4.25 which are somewhat larger than those given for similar cases in the table.

A table published by Wm. Sellers & Co. in their shafting catalogue—gives the horse-powers of iron and steel shafts for given diameters and speeds. An investigation of the table shows it to be based upon a value of about 4000 lb. for S or a coefficient of 4.31 in Table XLVI.

83. Combined Torsion and Bending.—It frequently happens that a shaft is subjected to bending as well as torsion; a familiar example of this is the case of an engine shaft which carries the twisting moment due to the crank effort and also bending moments caused by the overhang of the crank and the weight of the fly-wheel.

The direct stress due to the twisting is shear in the plane of the cross-section; the stresses due to the bending are primarily tension and compression parallel to the axis and at right angles to the shearing stress. The combination of these produces oblique stresses varying in direction and intensity as the shaft revolves. It is desirable to find the maximum values of these oblique stresses whether shearing or tensile.

Let p = direct stress due to bending
q = direct stress due to twisting
S_t = resultant tensile stress
S_s = resultant shearing stress.

Then is it shown in treatises on the mechanics of materials that the maximum values of the resultant stresses are as follows:[1]

$$S_t = \frac{p}{2} \pm \frac{1}{2}\sqrt{4q^2 + p^2} \qquad \text{(a)}$$

[1] Merriman's Mechanics of Materials, p. 151. Slocum and Hancock's Strength of Materials, p. 116.

$$S_s = \pm\frac{1}{2}\sqrt{4q^2+p^2} \tag{b}$$

Let M = bending moment on shaft
T = twisting moment on shaft.

Then by formulas (5) and (8) p. 3,

$$p = \frac{10.2M}{d^3}$$

$$q = \frac{5.1T}{d^3}.$$

Substituting these values in (a) and (b) and reducing, we have:

$$S_t = \frac{5.1}{d^3}\left(M \pm \sqrt{T^2+M^2}\right) \tag{c}$$

$$S_s = \pm\frac{5.1}{d^3}\sqrt{T^2+M^2}. \tag{d}$$

But the bending moment which would produce a stress $= S_t$ is:

$$M_1 = \frac{Std^3}{10.2}$$

and the twisting moment which would produce a stress $= S_s$ is:

$$T_1 = \frac{S_s d^3}{5.1}$$

Combining these equations with (c) and (d) respectively and reducing:

$$M_1 = \tfrac{1}{2}(M \pm \sqrt{T^2+M^2}). \tag{95}$$

$$T_1 = \sqrt{T^2+M^2}. \tag{96}$$

The method of designing a shaft subjected to both bending and twisting moments may thus be stated: Determine the diameter of shaft necessary to withstand safely a bending moment M_1, Equation (95); also, calculate the diameter to safely resist a twisting moment T_1 (Equation (96)). The larger diameter would then be used. *i.e.*,

$$\text{let } d = \sqrt[3]{\frac{10.2M_1}{S_t}} \text{ or } \sqrt[3]{\frac{5.1T_1}{S_s}}.$$

Equations (a) and (b) in this article may be used in combining shearing and tensile or shearing and compressive stresses, in whatever manner produced.

Other examples of combined stresses are furnished by columns and by machine frames having eccentric loads (see Art. 17).

In the case of columns, where the load is assumed to be central, the empirical formulas (12) and (12-a) given on pp. 4 and 5 are recommended.

Where a material like cast iron is concerned, as in the case of machine frames, no theoretical analysis is of much value and reliance can be placed only on experimental determinations of stresses and breaking loads.

84. Couplings.—The flange or plate coupling is most commonly used for fastening together adjacent lengths of shafting.

Fig. 73 shows the proportions of such a coupling. The flanges are turned accurately on all sides, are keyed to the shafts and the two are centered by the projection of the shaft from one part into the other as shown at *A*. The bolts are turned to fit the holes loosely so as not to interfere with the alignment.

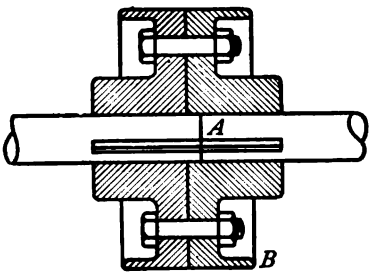

FIG. 73.

The projecting rim as at *B* prevents danger from belts catching on the heads and nuts of the bolts.

The faces of this coupling should be trued up in a lathe after being keyed to the shaft.

Jones and Laughlins in their shafting catalogue give the following proportions for flange couplings.

Diam. of shaft	Diam. of hub	Length of hub	Diam. of coupling
2	4½	3½	8
2½	5⅝	4¾	10
3	6¾	5¼	12
3½	8	6⅛	14
4	9	7	16
5	11¼	8¾	20

There are five bolts in each coupling.

The sleeve coupling is neater in appearance than the flange coupling but is more complicated and expensive.

In Fig. 74 is illustrated a neat and effective coupling of this type. It consists of the sleeve *S* bored with two tapers and two threaded ends as shown. The two conical, split bushings *BB*

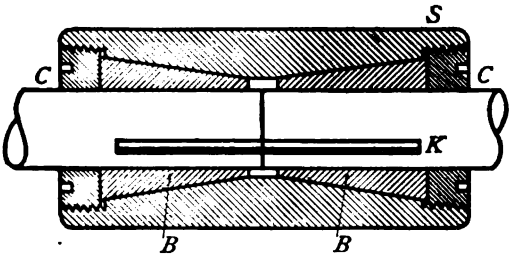

FIG. 74.

are prevented from turning by the feather key *K* and are forced into the conical recesses by the two threaded collars *CC* and thereby clamped firmly to the shaft. The key *K* also nicks slightly the center of the main sleeve *S*, thus locking the whole combination.

Couplings similar to this have been in use in the Union Steel Screw Works, Cleveland, Ohio, for many years and have given good satisfaction.

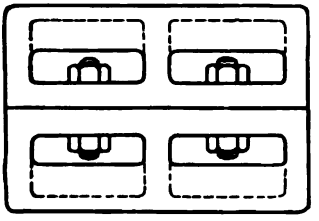

FIG. 75.

The Sellers coupling is of the type illustrated in Fig. 74, but is tightened by three bolts running parallel to the shaft and taking the place of the collars *CC*.

In another form of sleeve coupling the sleeve is split and clamped to the shaft by bolts passing through the two halves as illustrated in Fig. 75.

The "muff" coupling, as its name implies is a plain sleeve slipped over the shafts at the point of junction, accurately fitted and held by a key running from end to end. It may be regarded as a permanent coupling since it is not readily removed.

85. Clutches.—By the term clutch, is meant a coupling which may be readily disengaged so as to stop the follower shaft or pulley. Clutch couplings are of two kinds, positive or jaw clutches and friction clutches.

The jaw clutch consists of two hubs having sector shaped projections on the adjacent faces which may interlock. One of the couplings can be slid on its shaft to and from the other by means of a loose collar and yoke, so as to engage or disengage with its mate. This clutch has the serious disadvantage of not being readily engaged when either shaft is in motion. Friction clutches are not so positive in action, but can be engaged without difficulty and without stopping the driver.

Three different classes of friction clutches may be distinguished according as the engaging members are flat rings, cones or cylinders.

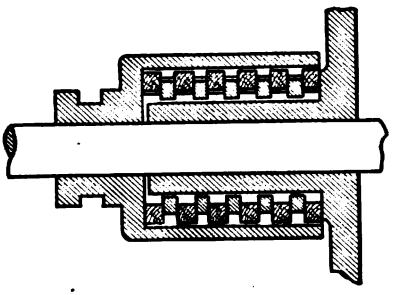

FIG. 76.

The Weston clutch, Fig. 76, belongs to the first-named class. A series of rings inside a sleeve on the follower B interlocks with a similar series outside a smaller sleeve on the driver A somewhat as in a thrust bearing (Art. 70). Each ring can slide on its sleeve but must rotate with it.

When the parts A and B are forced together the rings close up and engage by pairs, producing a considerable turning moment with a moderate end pressure. Let:

P = pressure along axis
n = number of pairs of surfaces in contact
f = coefficient of friction
r = mean radius of ring
T = turning moment

Then will:

$$T = Pfnr. \tag{97}$$

If the rings are alternately wood and iron, as is usually the case, f will have values ranging from 0.25 to 0.50.

The cone clutch consists of two conical frustra, one external

and one internal, engaging one another and driving by friction. Using the same notation as before, and letting $\alpha =$ angle between element of cone and axis, the normal pressure between the two surfaces will be: $\frac{P}{\sin \alpha}$ and the friction will be: $\frac{Pf}{\sin \alpha}$.

Therefore: $$T = \frac{Pfr}{\sin \alpha} \tag{98}$$

α should slightly exceed 5 degrees to prevent sticking and f will be at least 0.10 for dry iron on iron.

Substituting $f = 0.10$ and $\sin \alpha = 0.125$ we have $T = 0.8\ Pr$ as a convenient rule in designing.

Fig. 77 illustrates the type of clutch more generally used on shafting for transmitting moderate quantities of power.

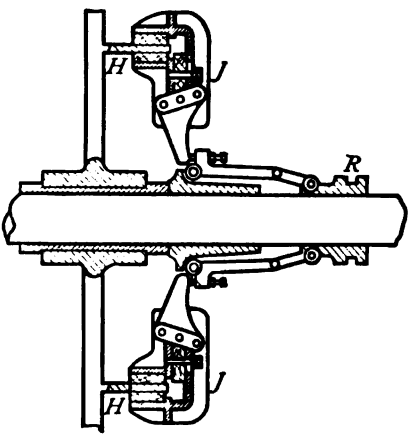

FIG. 77.

As shown in the figure one member is attached to a loose pulley on the shaft, but this same type can be used for connecting two independent shafts.

The ring or hoop H, finished inside and out, is gripped at intervals by pairs of jaws JJ having wooden faces.

These jaws are actuated as shown by toggles and levers connected with the slip ring R. The toggles are so adjusted as to pass by the center and lock in the gripping position.

These clutches are convenient and durable but occupy considerable room in proportion to their transmitting power. The Weston clutch is preferable for heavy loads.

Cork inserts in metal surfaces have been used to some extent, as the coefficient of friction is much greater for cork than for wood. The cork may be boiled to soften it and forced into holes in one of the members. When pressure is applied, the projecting cork takes the load and carries it with good efficiency. As the

normal pressure is increased, the cork yields, finally becoming flush with the metal surface and dividing its load with the latter.

Cork in its natural state is liable to wear quite rapidly under hard service. It may be hardened by being heated under heavy pressure and in this condition is much more durable.

Professor I. N. Hollis gives the coefficients of friction for different materials used in clutches, as follows:

Cast iron on cast iron	0.16
Bronze on cast iron	0.14
Cork on cast iron	0.33

Professor C. M. Allen in experiments on clutches for looms found that cork inserts gave a torque nearly double that of a leather face on iron.

The roller clutch is much used on automatic machinery as it combines the advantages of positive driving and friction engagement. A cylinder on the follower is embraced by a rotating ring carried by the driver.

The ring has a number of recesses on its inner surface which hold hardened steel rollers. These recesses being deeper at one end allow the rollers to turn freely as long as they remain in the deep portions.

The bottom of the recess is inclined to the tangent of the circle at an angle of from 9 to 14 degrees.

When by suitable mechanism the rollers are shifted to the shallow portions of the recesses they are immediately gripped between the ring and the cylinder and set the latter in motion.

A clutch of this type is almost instantaneous in its action and is very powerful, being limited only by the strength of the materials of which it is composed.

Several small rolls of different materials and diameters were tested by the writer in 1905 with the following results:

Material	Diameter	Length	Set load	Ultimate load
Cast iron	0.375	1.5	5,500	12,400
Cast iron	0.75	1.5	6,800	19,500
Cast iron	1.125	1.5	7,800	29,700
Cast iron	0.4375	1.5	8,800	20,000
Soft steel	0.4375	1.5	11,100	.....
Hard steel	0.4375	1.5	35,000	.....

86. Automobile Clutches.—The development of the automobile industry has created a demand for clutches of small size and considerable power; these clutches must also be capable of picking up a load gently and of holding it firmly; they must be durable and reliable under peculiarly severe conditions and for considerable periods.

Mr. Henry Souther contributes to the literature of this subject an interesting paper from which some of the following data are quoted. Reference is made to the paper itself for more complete information.[1]

Automobile clutches may be roughly classified as (*a*) conical; (*b*) disc or multiple disc; (*c*) band either expanding or contracting. The clutch is located between the engine and gear box, usually near the fly-wheel and sometimes forming a part of it.

Conical clutches are in some respects the most satisfactory for automobile use. They require but slight motion for engagement and slight pressure to hold them in place. No lubricant is necessary and therefore there is no trouble from gumming and sticking.

The materials used for the rubbing surfaces are generally aluminum covered with leather for one, and gray cast iron for the other. Castor or neatsfoot oil may be used to keep the leather soft. To render the engagement more gradual, springs are sometimes placed under the leather at six or eight points on the circumference; these permit some slipping until the whole surface of the leather is brought into contact.

The angle of the cone is about 8 degrees in ordinary practice, but some manufacturers are using 10 or 12 degrees. (This is the angle on one side.)

The principal difficulty with conical clutches is that of poor alignment. Unless the axes of the two cones coincide, engagement is uncertain and irregular. This coincidence can only be secured by the use of two universal joints insuring perfect flexibility.

Mr. Souther gives the following table as representing three typical clutches in successful use:

[1] Trans. A. S. M. E., May, 1908.

TABLE XLVII

POWER OF CLUTCHES

	1	2	3
Area of surface (square inches)	113.1	78.7	73.6
Angle (one side) (degrees)	8	8	8
Maximum radius (inches)	8½	8⅛	7⅝
Spring pressure (pounds)	375	320	250
Horse-power	48	42	40

Fig. 78 illustrates the conical clutch in its simplest form.

The disc clutch consists of a disc on the driven member clamped between two discs on the driver, which latter is generally the fly-wheel. Springs are used to insure separation when disengaged and other springs furnish the pressure for engagement.

A multiple disc clutch similar to the Weston is also used. In this case the discs are alternately of bronze and steel. All disc clutches must be lubricated and upon the type and quantity of lubrication depends the character of the service. Copious lubrication means gradual engagement and slight driving power; scanty lubrication gives more power and quick seizure.

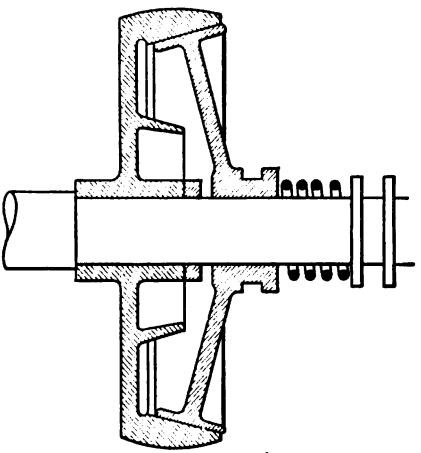

FIG. 78.

The principal disadvantage of the disc clutch is the heavy spring pressure necessary to insure driving power.

The multiple disc clutches cause some trouble in lubrication and are complicated and difficult of access.

Band clutches depend for their driving power on the friction between the case and an adjustable band or ring which can be expanded or contracted by suitable mechanism.

The more usual construction has a band which is expanded against the inside surface of the enclosing case by means of internally operated levers and springs.

Centrifugal force at high speeds has a disturbing effect on the levers and sometimes causes the clutch to release automatically. This difficulty has been overcome in some clutches by an improved arrangement of levers and springs.

87. Coupling Bolts.—The bolts used in the ordinary flange couplings are exposed to shearing, and the combined moment of the shearing forces should equal the twisting moment on the shaft.

Let n = number of bolts
d_1 = diameter of bolt
D = diameter of bolt circle.

We will assume that the bolt has the same shearing strength as the shaft. The combined shearing strength of the bolts is $.7854d_1^2nS$ and their moment of resistance to shearing is

$$.7854d_1^2nS \times \frac{D}{2} = .3927Dd_1^2nS$$

This last should equal the torsion moment of the shaft or

$$.3927Dd_1^2nS = \frac{Sd^3}{5.1}$$

Solving for d_1 and assuming $D = 3d$ as an average value, we have $d_1 = \frac{d}{\sqrt{6n}}$. (79)

In practice rather larger values are used than would be given by the formula.

88. Shafting Keys.—The moment of the shearing stress on a key must also equal the twisting moment of the shaft.

Let b = breadth of a key
l = length of key
h = total depth of key
S' = shearing strength of key.

The moment of shearing stress on key is

$$blS' \times \frac{d}{2} = \frac{bdlS'}{2}$$

and this must equal $\frac{Sd^3}{5.1}$ Usually $b = \frac{d}{4}$.

For shafts of machine steel $S = S'$, and for iron shafts $S = \frac{3}{4}S'$ nearly, as keys should always be of steel.

Substituting these values and reducing:

For iron shafting $l = 1.2d$ nearly.

For steel shafting $l = 1.6d$ nearly as the least lengths of key to prevent its failing by shear.

If the keyway is to be designed for uniform strength, the shearing area of the shaft on the line AB, Fig. 79, should equla the shearing area of the key, if shaft and key are of the same material and $AB = CD = b$.

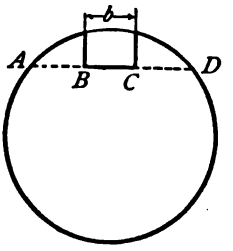

FIG. 79.

These proportions will make the depth of keyway in shaft about $= \frac{5}{8}b$ and would be appropriate for a square key.

To avoid such a depth of keyway which might weaken the shaft, it is better to use keys longer than required by preceding formulas. In American practice the total depth of key rarely exceeds $\frac{5}{8}b$ and one-half of this depth is in shaft.

To prevent crushing of the key the moment of the compressive strength of half the depth of key must equal T.

or
$$\frac{d}{2} \times \frac{lh}{2} \times S_c = \frac{Sd^3}{5.1} \qquad \text{(a)}$$

where S_c is the compressive strength of the key.

For iron shafts $S_c = 2S$

and for steel shafts $S_c = \frac{3}{2}S$

Substituting values of S_c and assuming $h = \frac{5}{8}b = \frac{5}{32}d$ we have

Iron shafts $l = 2.5d$ nearly.

Steel shafts $l = 3\frac{1}{3}d$ nearly, as the least length for flat keys to prevent lateral crushing.

The above refers to parallel keys. Taper keys have parallel sides, but taper slightly between top and bottom. When driven home they have a tendency to tip the wheel or coupling on the shaft. This may be partially obviated by using two keys 90 degrees apart so as to give three points of contact between hub and shaft. The taper of the keys is usually about ¼ in. to 1 ft.

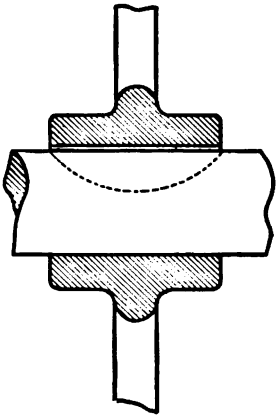

FIG. 80.

The Woodruff key is sometimes used on shafting. As may be seen in Fig. 80 this key is semi-circular in shape and fits a recess sunk in the shaft by a milling cutter.

89. Strength of Keyed Shafts.—Some very interesting experiments on the strength of shafts with keyways are reported by Professor H. F. Moore.[1] The material of the shafts was soft steel some being turned and some cold-rolled. The diameters varied from 1¼ to 2¼ in. Keyways of ordinary proportions, both for straight keys and for Woodruff keys, were cut in the specimens and the latter were then subjected to twisting and to combined twisting and bending.

So far as the ultimate strength was concerned, the keyways seemed to have little effect, the shaft with a single keyway having about the same strength as a shaft without the keyway. After the elastic limit was passed, the keyways gradually closed up and were entirely closed at rupture. The elastic limit, however, was noticeably affected by the presence of a keyway. The ratio of the strength at elastic limit with keyway to the strength at elastic limit without keyway is called the efficiency and is denoted by $-e-$. The corresponding ratio of angles of twist inside the elastic limit is denominated $-k-$.

According to Professor Moore, the following equations represent fairly well the values of e and k:

$$e = 1 - 0.2w - 1.1h \tag{99}$$

$$k = 1 + 0.4w + 0.7h \tag{100}$$

[1] University of Illinois Bulletin No. 42, 1909.

$$\text{where } w = \frac{\text{width of keyway}}{\text{diameter of shaft}}$$

$$\text{and } h = \frac{\text{depth of keyway}}{\text{diameter of shaft}}.$$

Two values of w were used in the experiments: $w = 0.25$ and 0.50 and two values of h:

$$h = 0.125 \text{ and } 0.1875.$$

Table XLVIII gives the values of e as obtained by the experiments:

TABLE XLVIII

EFFICIENCY OF SHAFTS WIFH KEYWAYS

$$\text{Efficiency} = \frac{\text{elastic strength of shaft with keyway}}{\text{elastic strength of shaft without keyway}}$$

Dimensions of keyway	$W=0.50$ $h=0.125$	$W=0.25$ $h=0.1875$	$W=0.25$ $h=0.125$	Woodruff System[1]
Under simple torsion:				
Cold-rolled shaft, diameter, 1¼ in.	0.762	0.760	0.820	0.840
Cold-rolled shaft, diameter, 1 9/16 in.	0.803 0.758	0.846 0.817	0.900 0.889	0.860 0.815
Cold-rolled shaft, diameter, 1 15/16 in.	0.748 0.764	0.710 0.750	0.860 0.824	0.826 0.835
Cold-rolled shaft, diameter, 2¼ in.	0.848 0.705	0.775 0.689	0.839 0.825	0.943 0.861
Under combined torsion and bending:				
1. Twisting moment = bending moment.	0.630	0.636	0.791	0.716
Cold-rolled shaft, diameter, 1¼ in.	0.680	0.698	0.803	0.750
Cold-rolled shaft, diameter, 1 15/16 in.	0.584 0.671	0.697 0.775	0.854	0.858 0.840
2. Twisting moment = 5/3 bending moment.	0.895	0.670	0.940	0.930*
Cold-rolled shaft, diameter, 1¼ in.	0.870	0.735	0.888	0.880
Cold-rolled shaft, diameter, 1 15/16 in.	0.740 0.815	....	0.832 0.840	0.856 0.810
General average.....	0.752	0.735	0.850	0.845

[1]In 1 1/4-in. shafts keyways were cut for No. 15 Woodruff keys.
In 1 9/16-in. shafts keyways were cut for No. 25 Woodruff keys.
In 1 15/16-in. shafts keyways were cut for No. S Woodruff keys.
In 2 1/4-in. shafts keyways were cut for No. U Woodruff keys.

The average value of the fiber stress of the cold-rolled shafting at the elastic limit was 38940 lb. and the average modulus of elasticity 11,985,000.

It would appear that, considering the factor of safety usually allowed in shafting, the effect of ordinary keyways can safely be neglected.

90. Hangers and Boxes.—Since shafting is usually hung to the ceiling and walls of buildings it is necessary to provide means

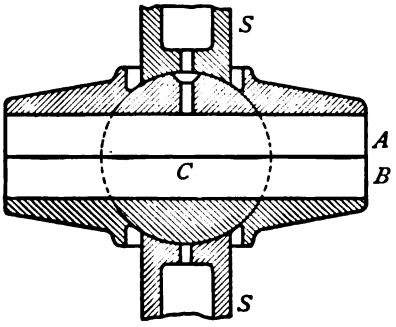

FIG. 81.

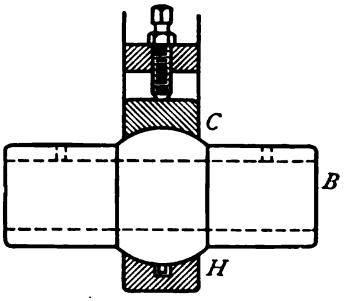

FIG. 82.

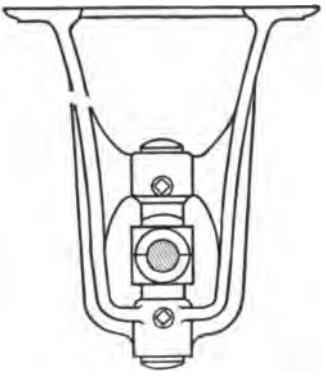

FIG. 83.

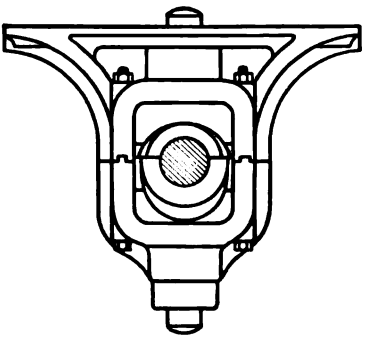

FIG. 84.

for adjusting and aligning the bearings as the movement of the building disturbs them. Furthermore as line shafting is continuous and is not perfectly true and straight, the bearings should be to a certain extent self-adjusting. Reliable experiments

have shown that usually one-half of the power developed by an engine is lost in the friction of shafting and belts. It is important that this loss be prevented as far as possible.

The boxes are in two parts and may be of bored cast-iron or lined with Babbitt metal. They are usually about four diameters of the shaft in length and are oiled by means of a well and rings or wicks. (See Art. 58.) The best method of supporting the box in the hanger is by the ball-and-socket joint; all other contrivances such as set screws are but poor substitutes.

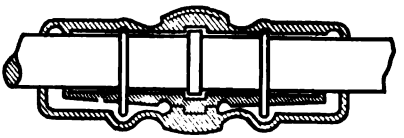

FIG. 85.

Fig. 81 shows the usual arrangement of the ball and socket.

A and *B* are the two parts of the box. The center is cast in the shape of a partial sphere with *C* as a center as shown by the dotted lines. The two sockets *S S* can be adjusted vertically in the hanger by means of screws and lock nuts. The horizontal adjustment of the hanger is usually effected by moving it bodily on the support, the bolt holes being slotted for this purpose.

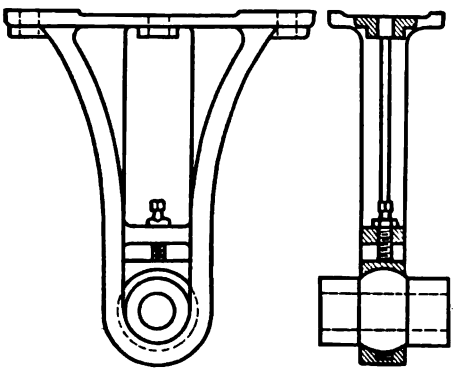

FIG. 86.

Counter shafts are short and light and are not subject to much bending. Consequently there is not the same need of adjustment as in line shafting.

In Fig. 82 is illustrated a simple bearing for counters. The solid cast-iron box *B* with a spherical center is fitted directly in a socket in the hanger *H* and held in position by the cap *C* and a set screw. There is not space here to show all the various forms of hangers and floor stands and reference is made to the catalogues of manufacturers. Hangers should be symmetrical, *i.e.*, the center of the box should be in a vertical line with center of base. They should have relatively broad bases and should have the

metal disposed to secure the greatest rigidity possible. Cored sections are to be preferred,

Fig. 83 illustrates the proportions of a Sellers line-shaft hanger. This type is also made with the lower half removable so as to facilitate taking down the shaft.

Fig. 84 shows the outlines of a hanger for heavy shafting as manufactured by the Jones & Laughlins Company while Fig. 85 illustrates the design of the box with oil wells and rings.

The open side hanger is sometimes adopted on account of the ease with which the shaft can be removed, but it is much less rigid than the closed hanger and is suitable only for light shafting. The countershaft hanger shown in Fig. 86 is simple, strong and symmetrical and is a great improvement over those using pointed set screws for pivots. Hangers similar to this are used by the Brown & Sharpe Mfg. Co. with some of their machines.

PROBLEMS

1. Calculate the safe diameters of head shaft and three line shafts for a factory, the material to be rolled iron and the speeds and horse-powers as follows:

Head shaft	100 H. P.	200 rev. per min.
Machine shop	30 H. P.	120 rev. per min.
Pattern shop	50 H. P.	250 rev. per min.
Forge shop	20 H. P.	200 rev. per min.

2. Determine the horse-power of at least two lines of shafting whose speeds and diameters are known.

3. Design and sketch to scale a flange coupling for a 3-in. line shaft including bolts and keys.

4. Design a sleeve coupling for the foregoing, different in principle from the ones shown in the text.

5. A 4-in. steel head shaft makes 100 rev. per min. Find the horse-power which it will safely transmit, and design a Weston ring clutch capable of carrying the load.

There are to be six wooden rings and five iron rings of 12-in. mean diameter. Find the moment carried by each pair of surfaces in contact and the end pressure required.

6. Find mean diameter of a single cone clutch for same shaft with same end pressure.

7. Find radial pressure required for a clutch like that shown in Fig. 77, the ring being 24 in. in mean diameter and there being four pairs of grips. Other conditions as in preceding problems.

8. Select the line-shaft hanger which you prefer among those in the laboratories and make sketch and description of the same.

9. Do. for a countershaft hanger.

10. Explain in what way a floor-stand differs from a hanger.

REFERENCES

Machine Design. Low and Bevis, Chapter VIII.

Efficiency of Shafting. Tr. A. S. M. E., Vol. VI, p. 461; Vol. VII, p. 138; Vol. XVIII, p. 228; Vol. XVIII, p. 861.

Shafting Clutches. Tr. A. S. M. E., Vol. XIII, p. 236.

Ball Bearing Hangers. Tr. A. S. M. E., Vol. XXXII, p. 533.

Test of Clutch Coupling. Tr. A. S. M. E., Vol. XXXII, p. 549.

CHAPTER X

GEARS, PULLEYS AND CRANKS

91. Gear Teeth.—The teeth of gears may be either cast or cut, but the latter method prevails, since cut gears are more accurate and run more smoothly and quietly. The proportions of the teeth are essentially the same for the two classes, save that more back lash must be allowed for the cast teeth. The circular pitch is obtained by dividing the circumference of the pitch circle by the number of teeth. The diametral pitch is obtained by dividing the number of teeth by the diameter of the pitch circle and equals the number of teeth per inch of diameter. The reciprocal of the diametral pitch is sometimes called the module. The addendum is the radial projection of the tooth beyond the pitch circle, the dedendum the corresponding distance inside the pitch circle. The clearance is the difference between the dedendum and addendum; the back lash the difference between the widths of space and tooth on the pitch circle.

Let circular pitch $=p$

module $=\frac{p}{\pi}=m$

diametral pitch $=\frac{\pi}{p}=\frac{1}{m}$

addendum $=a$

dedendum or flank $=f$

clearance $=f-a=c$

height $=a+f=h$

width $=w$. (See Fig. 88.)

The usual rule for standard cut teeth is to make $w=\frac{p}{2}$, allowing no calculable back-lash, to make $a=m$ and $f=\frac{9m}{8}$ or $h=2\frac{1}{8}m$ and clearance $=\frac{m}{8}$.

There is, however, a marked tendency at the present time toward the use of shorter teeth. The reasons urged for their

adoption are: first, greater strength and less obliquity of action; second, less expense in cutting.[1] Several systems have been proposed in which the height of tooth h varies from $0.425p$ to $0.55p$.

According to the latter system $a=0.25p$, $f=0.3p$, and $c=.05p$.

In modern practice the diametral pitch is a whole number or a common fraction and is used in describing the gear. For instance, a 3-pitch gear is one having 3 teeth per inch of diameter. The following table gives the pitches in common use and the proportions of long and short teeth.

If the gears are cut, $w=\frac{p}{2}$; if cast gears are used, $w=0.46p$ to $0.48p$.

TABLE XLIX

PROPORTIONS OF GEAR TEETH

Pitch		Standard teeth			Short teeth		
Diametral	Circular	Addend. a	Height h	Clearance c	Addend. a	Height h	Clearance c
½	6.283	2.	4.25	0.25	1.571	3.456	0.314
¾	4.189	1.33	2.82	0.167	1.047	2.303	0.209
1	3.142	1.	2.125	0.125	0.785	1.728	0.157
1¼	2.513	0.8	1.7	0.1	0.628	1.383	0.125
1½	2.094	0.667	1.415	0.083	0.524	1.152	0.105
1¾	1.795	0.571	1.212	0.071	0.449	0.988	0.09
2	1.571	0.5	1.062	0.062	0.392	0.863	0.078
2¼	1.396	0.445	0.945	0.056	0.349	0.768	0.070
2½	1.257	0.4	0.85	0.05	0.314	0.691	0.063
2¾	1.142	0.364	0.775	0.045	0.286	0.629	0.057
3	1.047	0.333	0.708	0.042	0.262	0.576	0.052
3½	0.898	0.286	0.608	0.036	0.224	0.494	0.045
4	0.785	0.25	0.531	0.031	0.196	0.432	0.039
5	0.628	0.2	0.425	0.025	0.157	0.345	0.031
6	0.524	0.167	0.354	0.021	0.131	0.288	0.026
7	0.449	0.143	0.304	0.018	0.112	0.246	0.022
8	0.393	0.125	0.266	0.016	0.098	0.216	0.020
9	0.349	0.111	0.236	0.014	0.087	0.191	0.017
10	0.314	0.1	0.212	0.012	0.079	0.174	0.016
11	0.286	0.091	0.193	0.011	0.071	0.156	0.014
12	0.262	0.0834	0.177	0.010	0.065	0.143	0.013
13	0.242	0.077	0.164	0.010	0.060	0.132	0.012
14	0.224	0.0715	0.152	0.009	0.056	0.123	0.011
15	0.209	0.0667	0.142	0.008	0.052	0.114	0.010
16	0.196	0.0625	0.133	0.008	0.049	0.108	0.010

[1] See *Am. Mach.* Jan. 7, 1897, p. 6.

92. Strength of Teeth.—Let P = total driving pressure on wheel at pitch circle. This may be distributed over two or more teeth, but the chances are against an even distribution.

Again, in designing a set of gears the contact is likely to be confined to one pair of teeth in the smaller pinions.

Each tooth should therefore be made strong enough to sustain the whole pressure.

Rough Teeth.—The teeth of pattern molded gears are apt to be more or less irregular in shape, and are especially liable to be thicker at one end on account of the draft of the pattern.

In this case the entire pressure may come on the outer corner of a tooth and tend to cause a diagonal fracture.

Let C in Fig. 87 be the point of application of the pressure P, and AB the line of probable fracture.

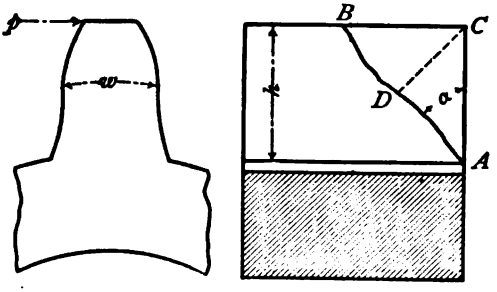

Drop the $\perp CD$ on AB

Let $AB = x$ and $CD = y$ angle $CAD = a$

FIG. 87.

The bending moment at section AB is $M = Py$, and the moment of resistance is $M' = \frac{1}{6}Sxw^2$

where S = safe transverse strength of material.

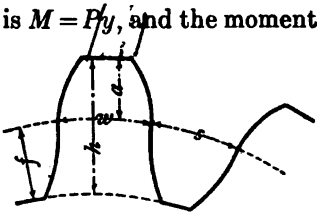

FIG. 88.

$$Py = \frac{1}{6}Sxw^2$$

and

$$S = \frac{6Py}{w^2x}. \qquad \text{(a)}$$

If P and w are constant, then S is a maximum when $\frac{y}{x}$ is a maximum.

But $$y = h \sin\alpha \text{ and } x = \frac{h}{\cos\alpha}$$

$$\frac{y}{x} = \sin\alpha \cos\alpha \text{ which is a maximum}$$

when $\alpha = 45°$ and $\frac{y}{x} = \frac{1}{2}$

Substituting this value in (*a*) we have $S = \frac{3P}{w^2}$

But in this case $w = .47p$ and therefore $S = \frac{3P}{.221p^2}$

and $$p = 3.684 \sqrt{\frac{P}{S}} \tag{101}$$

diametral pitch, $$\frac{1}{m} = .853 \sqrt{\frac{S}{P}}. \tag{102}$$

Unless machine molded teeth are very carefully made, it may be necessary to apply this rule to them as well.

Cut Gears.—With careful workmanship machine molded and machine cut teeth should touch along the whole breadth. In such cases we may assume a line of contact at crest of tooth and a maximum bending moment.

$$M = Ph.$$

The moment of resistance at base of tooth is

$$M^1 = \tfrac{1}{6} Sbw^2$$

when b is the breadth of tooth.

In most teeth the thickness at base is greater than w, but in radial teeth it is less. Assuming standard proportions for cut gears:

$$h = 2\tfrac{1}{8} m = .6765p$$
$$w = .5p$$

and substituting above:

$$.6765\, Pp = \frac{Sbp^2}{24}$$

$$P = .0616bSp. \tag{103}$$

For short teeth having $h = .55p$ formula (103) reduces to:

$$P = .0758bSp. \tag{104}$$

The above formulas are general whatever the ratio of breadth

to pitch. The general practice in this country is to make

$$b = 3p.$$

Substituting this value of b in (103) and (104) and reducing:

$$\text{Long teeth: } p = 2.326\sqrt{\frac{P}{S}} \tag{105}$$

$$\text{Short teeth: } p = 2.098\sqrt{\frac{P}{S}}. \tag{106}$$

The corresponding formulas for the diametral pitch are:

$$\text{Long teeth: } \frac{1}{m} = 1.35\sqrt{\frac{S}{P}} \tag{107}$$

$$\text{Short teeth: } \frac{1}{m} = 1.49\sqrt{\frac{S}{P}} \tag{108}$$

93. Lewis' Formulas.—The foregoing formulas can only be regarded as approximate, since the strength of gear teeth depends upon the number of teeth in the wheel; the teeth of a rack are broader at the base and consequently stronger than those of a pinion. This is more particularly true of epicycloidal teeth. Mr. Wilfred Lewis has deduced formulas which take into account this variation. For cut spur gears of standard dimensions the Lewis formula is as follows:

$$P = bSp\left(.124 - \frac{.888}{n}\right) \tag{109}$$

where n = number of teeth.

This formula reduces to the same as (103), for $n = 14$ nearly. Formula (103) would then properly apply only to small pinions, but as it would err on the safe side for larger wheels, it can be used where great accuracy is not needed. The same criticism applies to the other formulas in Art. 92.

The value of S used should depend on the material and on the speed.

The following safe values are recommended for cast iron and cast steel.

Linear velocity ft. per min.	100	200	300	600	900	1200	1800	2400
Cast iron.....	8,000	6,000	4,800	4,000	3,000	2,400	2,000	1,700
Cast steel.....	24,000	15,000	12,000	10,000	7,500	6,000	5,000	4,250

For gears used in hoisting machinery where there is slow speed and liability of shocks a writer in the *Am. Mach.* recommends smaller values of S than those given above[1] and proposes the following for four different metals:

Linear velocity ft. per min.	100	200	300	600	900	1200	1800	2400
Gray iron.....	4,800	4,200	3,840	3,200	2,400	1,920	1,600	1,360
Gun metal.....	7,200	6,300	5,760	4,800	3,600	2,880	2,400	2,040
Cast steel.....	9,600	8,400	7,680	6,400	4,800	3,840	3,200	2,720
Mild steel.....	12,000	10,500	9,600	8,000	6,000	4,800	4,000	3,400

The experiments described in the next article show that the ultimate values of S are much less than the transverse strength of the material and point to the need of large factors of safety.

94. Experimental Data.—In the *Am. Mach.* for Jan. 14, 1897, are given the actual breaking loads of gear teeth which failed in service. The teeth had an average pitch of about 5 in., a breadth of about 18 in. and the rather unusual velocity of over 2000 ft. per minute. The average breaking load was about 15,000 lb. there being an average of about 50 teeth on the pinions. Substituting these values in (109) and solving we get

$$S = 1575 \text{ lb.}$$

This very low value is to be attributed to the condition of pressure on one corner noted in Art. 92. Substituting in formula for such a case.

$$S = \frac{3P}{.221p^2} = 8150$$

This all goes to show that it is well to allow large factors of safety for rough gears, especially when the speed is high.

[1] *Am. Mach.*, Feb. 16, 1905.

Experiments have been made by the author on the static strength of rough cast-iron gear teeth by breaking them in a testing machine. The teeth were cast singly from patterns, were two pitch and about 6 in. broad. The patterns were constructed accurately from templates representing 15 degrees involute teeth and cycloidal teeth drawn with a describing circle one-half the pitch circle of 15 teeth; the proportions used were those given for standard cut gears.

There were in all 41 cycloidal teeth of shapes corresponding to wheels of 15–24–36–48–72–120 teeth and a rack. There were 28 involute teeth corresponding to numbers above given omitting the pinion of 15 teeth.

The pressure was applied by a steel plunger tangent to the surface of tooth and so pivoted as to bear evenly across the whole breadth. The teeth were inclined at various angles so as to vary the obliquity from 0 to 25 degrees for the cycloidal and from 15 degrees to 25 degrees for the involute. The point of application changed accordingly from the pitch line to the crest of the tooth. From these experiments the following conclusions are drawn:

1. The plane of fracture is approximately parallel to line of pressure and not necessarily at right angles to radial line through center of tooth.

2. Corner breaks are likely to occur even when the pressure is apparently uniform along the tooth. There were fourteen such breaks in all.

3. With teeth of dimensions given, the breaking pressure per tooth varies from 25,000 lb. to 50,000 lb. for cycloids as the number of teeth increases from 15 to infinity; the breaking pressure for involutes of the same pitch varies from 34,000 lb. to 80,000 lb. as the number increases from 24 to infinity.

4. With teeth as above the average breaking pressure varies from 50,000 lb. to 26,000 lb. in the cycloids as the angle changes from 0 degrees to 25 degrees and the tangent point moves from pitch line to crest; with involute teeth the range is between 64,000 and 39,000 lb.

5. Reasoning from the figures just given, rack teeth are about twice as strong as pinion teeth and involute teeth have an advantage in strength over cycloidal of from 40 to 50 per cent. The

advantage of short teeth in point of strength can also be seen. The modulus of rupture of the material used was about 36,000 lb. Values of S calculated from Lewis' formula for the various tooth numbers are quite uniform and average about 40,000 lb. for cycloidal teeth. Involute teeth are to-day generally preferred by manufacturers.

95. Modern Practice.—Two tendencies are quite noticeable to-day in the practice of American manufacturers, one toward the use of shorter teeth and the other toward a larger angle of obliquity.

The effect of these two changes upon the action of gear teeth is the subject of a comprehensive paper read by Mr. R. E. Flanders in 1908.[1]

Those readers who desire a detailed mathematical discussion of these points are referred to Mr. Flander's paper.

In brief, the effects of shorter teeth are: (*a*) To reduce the evils of interference with involute teeth; (*b*) to diminish the arc of action; (*c*) to increase the strength; (*d*) to increase the durability; (*e*) to reduce the price of the gear.

The effects of an increase in the angle of obliquity are (*f*) to diminish interference; (*g*) to diminish the arc of action; (*h*) to strengthen the teeth; (*j*) to increase side pressure on bearings; (*k*) to increase the lost work; (*l*) to distribute the wear more evenly.

It will be noticed from the above that the effects of the two changes are mainly the same. To reduce interference, to strengthen the teeth, and to secure durability and uniform wear are all desirable and important.

The question of side pressure is not important nor that of lost work. The efficiency of accurately cut spur gearing, according to experiments by Lewis and others, is between 95 and 98 per cent.

Some examples of modern practice will show the present tendencies. (See next page.)

Mr. Flanders states that seven out of eleven automobile manufacturers questioned are using the stub form of tooth and like it.

[1] Trans. A. S. M. E., 1908.

Name of firm	Involute teeth		Remarks
	Addendum	Pressure angle	
Wm. Sellers & Co.....	0.942 m	20 degrees	
C. W. Hunt Co.....	0.785 m	14½ degrees	
Wellman-Seaver-Morgan Co.	0.785 m	20 degrees	Steel mill.
Fellows Gear Shaper Co....	0.70 m 0.80 m	20 degrees	

NOTE.—m = module $= \frac{p}{\pi}$.

A committee has recently been appointed by the American Society of Mechanical Engineers to investigate the subject of interchangeable involute gearing and if practicable to recommend a standard form. Mr. Wilfred Lewis, the chairman of the committee, is on record as approving a pressure angle of 22½ degrees and an addendum of 0.875 m.[1]

Mr. Fellows, another member of the committee, recommends an angle of 20 degrees and $a = 0.75$ m.

Either of these plans will do away with interference and allow of the use of 12-tooth pinions.

Mr. Gabriel of the Brown & Sharpe Manufacturing Company is in favor of retaining the present angle of 14½ degrees and $a = m$.

One objection to the present standard is that it is necessary to empirically modify the addendum near the crest of the tooth to prevent interference. It is claimed on the other hand that this "easing off" of the point of the tooth is a help in bringing the teeth together without shock.

Teeth cut with a milling cutter or planed by a form can be made of empirical shape without difficulty, but teeth generated or "hobbed" must correspond in all ways to some theoretical curve which matches the rack used as a basis for the system.

At the present writing, the problem of choosing an acceptable standard for involute gears seems far from solution.

[1] Trans. A. S. M. E., 1910.

96. Teeth of Bevel Gears.—There have been many formulas and diagrams proposed for determining the strength of bevel gear teeth, some of them being very complicated and inconvenient. It will usually answer every purpose from a practical standpoint, if we treat the section at the middle of the breadth of such a tooth as a spur wheel tooth and design it by the foregoing formulas. The breadth of the teeth of a bevel gear should be about one-third of the distance from the base of the cone to the apex.

One point needs to be noted; the teeth of bevel gears are stronger than those of spur gears of the same pitch and number of teeth since they are developed from a pitch circle having an element of the normal cone as a radius. To illustrate, we will suppose that we are designing the teeth of a miter gear and that the number of teeth is 32. In such a gear the element of normal cone is $\sqrt{2}$ times the radius. The actual shape of the teeth will then correspond to those of a spur gear having $32\sqrt{2}=45$ teeth nearly.

NOTE.—In designing the teeth of gears where the number is unknown, the approximate dimensions may first be obtained by formula (105) or (106) and then these values corrected by using Lewis' formula.

PROBLEMS

1. The drum of a hoist is 8 in. in diameter and makes 5 revolutions per minute. The diameter of gear on the drum is 36 in. and of its pinion 6 in. The gear on the countershaft is 24 in. in diameter and its pinion is 6 in. in diameter. The gears are all cut.

Calculate the pitch and number of teeth of each gear, assuming a load of two tons on drum chain and $S=6000$. Also determine the horse-power of the machine.

2. Calculate the pitch and number of teeth of a cut cast-steel gear 10 in. in diameter, running at 350 revolutions per minute and transmitting 20 horse-power.

3. A cast-iron gear wheel is 30 ft. 6¾ in. in pitch diameter and has 192 teeth, which are machine-cut and 30 in. broad.

Determine the circular and diameter pitches of the teeth and the horse-power which the gear will transmit safely when making 12 revolutions per minute.

4. A two-pitch cycloidal tooth, 6 in. broad, 72 teeth to the wheel, failed under a load of 38,000 lb. Find value of S by Lewis' formula.

5. A vertical water-wheel shaft is connected to horizontal head shaft by cast-iron gears and transmits 150 horse-power. The water-wheel makes 200 revolutions per minute and the head shaft 100.

Determine the dimensions of the gears and teeth if the latter are approximately two pitch.

6. Work Problem 1, uisng short teeth instead of standard.

97. Rim and Arms.—The rim of a gear, especially if the teeth are cast, should have nearly the same thickness as the base of tooth, to avoid cooling strains.

It is difficult to calculate exactly the stresses on the arms of the gear, since we know so little of the initial stress present, due to cooling and contraction. A hub of unusual weight is liable to contract in cooling after the arms have become rigid and cause severe tension or even fracture at the junction of arm and hub.

A heavy rim on the contrary may compress the arms so as actually to spring them out of shape. Of course both of these errors should be avoided, and the pattern be so designed that cooling shall be simultaneous in all parts of the casting.

The arms of spur gears are usually made straight without curves or taper, and of a flat, elliptical cross-section, which offers little resistance to the air. To support the wide rims of bevel gears and to facilitate drawing the pattern from the sand, the arms are sometimes of a rectangular or *T* section, having the greatest depth in the direction of the axis of the gear. For pulleys which are to run at a high speed it is important that there should be no ribs or projections on arms or rim which will offer resistance to the air. Experiments by the writer have shown this resistance to be serious at speeds frequently used in practice.

A series of experiments conducted by the author are reported in the *Am. Mach.* for Sept. 22, 1898, to which paper reference is here made.

Twenty-four pulleys having 3½ in. face and diameters of 16, 20 and 24 in. were broken in a testing machine by the pull of a steel belt, the ratio of the belt tensions being adjusted by levers so as to be two to one. Twelve of the pulleys were of the ordinary cast-iron type having each six arms tapering and of an elliptic section. The other twelve were Medart pulleys with steel rims riveted to arms and having some six and some eight arms. Test pieces cast from the same iron as the pulleys showed an average modulus of rupture of 35,800 for the cast iron and 50,800 for the Medart.

In every case the arm or the two arms nearest the side of the belt

having the greatest tension, broke first, showing that the torque was not evenly distributed by the rim. Measurements of the deflection of the arms showed it to be from two to six times as great on this side as on the other. The buckling and springing of the rim was very noticeable especially in the Medart pulleys.

The arms of all the pulleys broke at the hub showing the greatest bending moment there, as the strength of the arms at the hub was about double that at the rim. On the other hand, some of the cast-iron arms broke simultaneously at hub and rim, showing a negative bending moment at the rim about one-half that at the hub.

The following general conclusions are justified by these experiments:

(*a*) The bending moments on pulley arms are not evenly distributed by the rim, but are greatest next the tight side of belt.

(*b*) There are bending moments at both ends of arm, that at the hub being much the greater, the ratio depending on the relative stiffness of rim and arms.

The following rules may be adopted for designing the arms of cast-iron pulleys and gears:

1. Multiply the net turning pressure, whether caused by belt or tooth, by a suitable factor of safety and by the length of the arm in inches. Divide this product by *one-half the number of arms* and use the quotient for a bending moment. Design the hub end of arm to resist this moment.

2. Make section modulus at the rim ends of arms one-half as strong as at the hub ends.

98. Sprocket Wheels and Chains.—Steel chains connecting toothed wheels afford a convenient means of getting a positive speed ratio when the axes are some distance apart. There are three classes in common use, the block chain, the roller chain and the so-called "silent" chain.

Mr. A. Eugene Michel publishes quite a complete discussion of the design of the first two classes in *Mchy.*, for February, 1905, and reference is here made to that journal.

Block chain is that commonly used on bicycles and small motor cars, so named from the blocks with round ends which are

used to fill in between the links. The sprocket teeth are spaced to a pitch greater than that of the chain links and the blocks rest on flat beds between the teeth, Fig. 89.

Roller chains have rollers on every pin and have inside and outside links. The sprocket teeth have the same pitch as the chain links, the rollers fitting circular recesses between the sprockets, Fig. 90.

The most serious failing of the chain is its tendency to stretch with use so that the pitch becomes greater than that of the sprocket teeth.

To obviate this difficulty in a measure considerable clearance should be given to the sprocket teeth as indicated in Fig. 90 As the pitch of the chain increases it will then ride higher upon

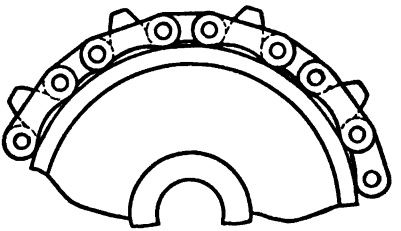

Fig. 89.

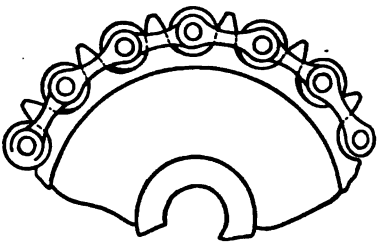

Fig. 90.

the sprockets until the end of the tooth is reached. The teeth are rounded on their side faces, that they may easily enter the gaps in the chain and have side clearance.

Mr. Michel gives the following values for the tensile strength of chains as determined by actual tests.

Roller Chain

Pitch inches.	½	⅝	¾	1	1¼	1½	1¾	2
Tensile strength lb.	1,200	1,200	4,000	6,000	9,000	12,000	19,000	25,000

Block Chain

1 inch pitch 1200 to 2500 lb.
1½ inch pitch 5000 lb.

Mr. Michel further recommends a factor of safety of from 5 to 40 according to the severity of the conditions as to speed and shocks.

The tendency is to use short links and double or triple width chains to increase the rivet bearing surface, as it is this latter factor which really determines the life of a chain.

Roller chains may be used up to speeds of 1000 to 1200 ft. per minute.

The sprocket should be so designed that one tooth will carry the load safely with the pressure near the crest since these conditions obtain as the chain stretches. Use values of S as in Art. 93.

99. Silent Chains.—The weak points in the ordinary chain, whether it be made with blocks or rollers, are the rivet bearings. It is the continual wear of these, due to insufficient area and lack of proper lubrication, that shortens the life of a chain.

The so-called "silent chain" with rocker bearings, is comparatively free from this defect. Fig. 91 illustrates the shapes of links, rivets and sprockets for this kind of chain as manufactured by the Morse Chain Company.

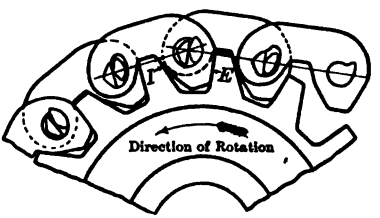

FIG. 91.

The chain proper is entirely outside of the sprocket teeth so that the latter may be continuous across the face of the wheel, save for a single guiding groove in the center.

Projections on the under side of the links engage with the teeth of the sprocket, E being the point of contact for the driver and I a similar point for the follower when the rotation is as indicated.

Each rivet consists practically of two pins called by the makers the rocker pin and the seat pin. Each pin is fastened in its particular gang of links and the relative motion is merely a rocking of one pin on the other without appreciable friction.

The pins are of hardened tool steel with softened ends. The combination of this freedom from rubbing contact with the adap-

tation of the engaging tooth profiles, gives a chain which can be safely run at high speeds without objectionable vibration or appreciable wear.

The chains can be made of almost any width from ½ in. up to 18 in., the width depending upon the pitch of the chain and the power to be transmitted.

The following are the working loads (and limiting speeds) of chains 2 in. in width and of different pitches, taken from a table published by the makers:

Pitch in inches	½	⅝	¾	.9	1.2	1.5
Working load in pounds	130	190	236	380	520	760
Limiting speed revolutions per minute.	2,000	1,600	1,200	1,100	800	600

The number of teeth in the small sprocket may vary from 15 to 30 according to the conditions.

Assuming 17 teeth and the number of revolutions given in the above table the speed of chain would be 1420 ft. per minute for the ½-in. pitch and 1275 ft. per minute for the 1.5 in.

Chains of this character have been run successfully at 2000 ft. per minute.

PROBLEMS

1. Design eight arms of elliptic section for a gear 54. in. pitch diameter, to transmit a pressure on tooth of 800 lb. Material, cast iron having a working transverse strength of 6000 lb. per square inch.

2. Two sprocket wheels of 75 and 17 teeth respectively are to transmit 25 horse-power at a chain speed of about 800 ft. per minute, with a factor of safety of 12—

Determine the proper pitch of roller chain, the pitch diameters of the sprockets, and the numbers of revolutions.

3. Suppose that in Problem 2, a "silent" chain is to be used and the chain speed increased to 1200 ft. per minute. Determine the proper pitch of chain to be used if the width of chain is 3 in. Determine diameters and revolutions of sprockets as before.

100. Cranks and Levers.—A crank or rocker arm which is used to transmit a continuous or reciprocating rotary motion is in

the condition of a cantilever or bracket with a load at the outer end.

If the web of the crank is of uniform thickness theory requires that its profile should be parabolic for uniform strength, the vertex of the parabola being at the load point.

A convenient approximation to this shape can be attained by using the tangents to the parabola at points midway between the

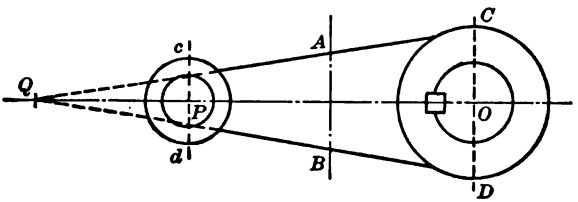

FIG. 92.

hub and the load point. See Fig. 92. The crank web is designed of the right thickness and breadth to resist the moment at AB, and the center line is produced to Q, making $PQ = \frac{1}{2}PO$.

Straight lines drawn from Q to A and B will be tangent to the parabola at the latter points and will serve as contour lines for the web.

Assume the following dimensions in inches:

l = length of crank = OP
t = thickness of web
h = breadth of web = AB
d = diameter of eye = cd
d_1 = diameter of pin
b = breadth of eye
D = diameter of hub = CD
D_1 = diameter of shaft
B = breadth of hub.

If the pressure on the crank pin is denoted by P then will the moment at AB be $\frac{Pl}{2}$ and the equations of moments for the cross-section will be:

$$\frac{Pl}{2} = \frac{Sth^2}{6} \qquad \text{[See Formula (3)]}$$

and from this the dimensions at AB may be calculated.

The moment at the hub will be Pl and will tend to break the iron on the dotted lines CD. The equation of moments for the hub is therefore:

$$Pl = \frac{SB}{6}(D^2 - D_1^2)$$

From this equation the dimensions of the hub may be calculated when D_1 is known. The eye of a crank is most likely to break when the pressure on the pin is along the line OP, and the fracture will be along the dotted lines cd. The bending moment will be P multiplied by the distance from center of pin to center of eye measured along axis of pin. If we call this distance x, then will the equation of moments be:

$$Px = \frac{Sb^2}{6}(d - d_1)$$

It is considered good practice among engine builders to make the values of x, b and B as small as practicable, in order to reduce the twisting moment on the web of the crank and the bending moment on the shaft. In designing the hub, allowance must be made for the metal removed at the key-way.

PROBLEM

Design a cast-steel crank for a steam engine having a cylinder 12 by 30 in. and an initial steam pressure of 120 lb. per square inch of piston. The shaft is 6 in. and the crank pin 3 in. in diameter. The distance x may be assumed as 4 in. Calculate,

1. Dimensions of web at AB.
2. Dimensions of hub allowing for a key $1 \times \frac{3}{4}$ in.
3. Dimensions of eye for pin and make a scale drawing in ink showing profile of crank complete. S may be assumed as 6000 lb. per square inch.

REFERENCES

Modern American Machine Tools, Benjamin. Chapter VIII.
Proportions of Arms and Rims. *Am. Mach.*, Sept. 30, 1909.
Efficiency of Gears. *Am. Mach.*, Jan. 12, 1905; Aug. 19, 1909.
Strength of Gear Teeth. *Mchy.*, Jan., 1908; *Am. Mach.*, Feb. 16, 1905; May 9, 1907; Jan. 16, 1908.
Proposed Standard Systems of Gear Teeth. *Am. Mach.*, Feb. 25, 1909; July 1, 1909.
Roller Chains. *Mchy.*, Feb., 1905.
Tests of Short Bearings in Chains. *Am. Mach.*, Dec. 28, 1905.

Progress in Chain Transmission. *Am. Mach.*, Nov. 7, 1907.
English Chain Drives. *Cass.*, May, 1908.
Lewis' Experiments on Gears. Tr. A. S. M. E., Vol. VII, p. 273.
Strength of Gear Teeth. Tr. A. S. M. E., Vol. XVIII, p. 766.
Chain Gearing. Tr. A. S. M. E., Vol. XXIII, p. 373.
Symposium on Gearing. Tr. A. S. M. E., Vol. XXXII, p. 807.

CHAPTER XI

FLY-WHEELS

101. In General.—The hub and arms of a fly-wheel are designed in much the same way as those of pulleys and gears, the straight arm with elliptic section being the favorite. The rims of such wheels are of two classes, the wide, thin rim used for belt transmission and the narrow solid rim of the generator or blowing engine wheel. Fly-wheels up to 8 or 10 ft. in diameter are usually cast in one piece; those from 10 to 16 ft. in diameter may be cast in halves, while wheels larger than the last mentioned should be cast in sections, one arm to each section.

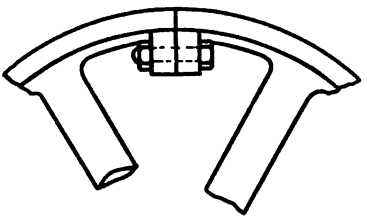

Fig. 93.

This is a matter, not of use, but of convenience in casting and in transportation.

The joints between hub and arms and between arms and rim need not be specially considered here, since wheels rarely fail at these points.

The rim and the joints in the rim cannot be too carefully designed. The smaller wheel cast in one piece is more or less subject to stresses caused by shrinkage. The sectional wheel is generally free from such stresses but is weakened by the numerous joints.

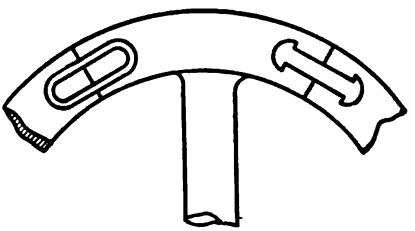

Fig. 94.

Rim joints are of two general classes according as bolts or links are used for fastenings.

Wide, thin rims are usually fastened together by internal flanges and bolts as shown in Fig. 93, while the stocky rims of the fly-wheels proper are joined directly by links or *T*-head "prisoners" as in Fig. 94.

As will be shown later, the former is a weak and unreliable joint, especially when located midway between the arms.

The principal stresses in fly-wheel rims are caused by centrifugal force.

102. Safe Speed for Wheels.—The centrifugal force developed in a rapidly revolving pulley or gear produces a certain tension on the rim, and also a bending of the rim between the arms. We will first investigate the case of a pulley having a rim of uniform cross-section.

It is safe to assume that the rim should be capable of bearing its own centrifugal tension without assistance from the arms.

Let D = mean diameter of pulley rim
t = thickness of rim
b = breadth of rim
w = weight of material per cubic inch
= .26 lb. for cast iron
= .28 lb. for wrought iron or steel
n = number of arms
N = number revolutions per minute
v = velocity of rim in feet per second.

First let us consider the centrifugal tension alone. The centrifugal pressure per square inch of concave surface is

$$p = \frac{Wv^2}{gr} \qquad \text{(a)}$$

where W is the weight of rim per square inch of concave surface $= wt$, and r = radius in feet $= \frac{D}{24}$.

The centrifugal tension produced in the rim by this force is by formula (15)

$$S = \frac{pD}{2t}.$$

Substituting the values of p, W and r and reducing:

$$S = \frac{12wv^2}{g} \qquad (110)$$

and

$$v = \sqrt{\frac{gS}{12w}}. \qquad (111)$$

For an average value of $w=.27$, (89) reduces to

$$S=\frac{v^2}{10} \text{ nearly}$$

a convenient form to remember.

The corresponding values of S for dry wood and for leather would be nearly:

Wood $\qquad S=\frac{v^2}{100}.$

Leather $\qquad S=\frac{v^2}{80}.$

If we assume S as the ultimate tensile strength, 16,500 lb. for cast iron in large castings and 60,000 lb. for soft steel, then the bursting speed of rim is:

for a cast-iron wheel $\qquad v=406$ ft. per second $\qquad$ (112)

and for steel rim $\qquad v=775$ ft. per second $\qquad$ (113)

and these values may be used in roughly calculating the safe speed of pulleys.

It has been shown by Mr. James B. Stanwood, in a paper read before the American Society of Mechanical Engineers,[1] that each section of the rim between the arms is moreover in the condition of a beam fixed at the ends and uniformly loaded.

This condition will produce an additional tension on the outside of rim. The formula for such a beam when of rectangular cross-section is

$$\frac{Wl}{12}=\frac{Sbd^2}{6} \qquad \text{(b)}$$

W in this case is the centrifugal force of the fraction of rim included between two arms.

The weight of this fraction is $\frac{\pi Dbtw}{n}$ and its centrifugal force

$$W=\frac{\pi Dbtw}{n}\times\frac{24v^2}{gD} \text{ or } W=\frac{24\pi btwv^2}{gn}$$

Also $\qquad l=\frac{\pi D}{n}$ and $d=t$

[1] See Trans. A. S. M. E., Vol. XIV.

Substituting these values in (b) and solving for S:

$$S=3.678\,\frac{Dwv^2}{tn^2} \tag{c}$$

If w is given an average value of .27 then

$$S=\frac{Dv^2}{tn^2}\text{ nearly} \tag{d}$$

and the total value of the tensile stress on outer surface of rim is

$$S'=\frac{Dv^2}{tn^2}+\frac{v^2}{10}\text{ nearly.} \tag{114}$$

Solving for v:

$$v=\sqrt{\frac{S^1}{\frac{D}{tn^2}+\frac{1}{10}}}. \tag{115}$$

In a pulley with a thin rim and small number of arms, the stress due to this bending is seen to be considerable.

It must, however, be remembered that the stretching of the arms due to their own centrifugal force and that of the rim will diminish this bending. Mr. Stanwood recommends a deduction of one-half from the value of S in (d) on this account.

Prof. Gaetano Lanza has published quite an elaborate mathematical discussion of this subject. (See Vol. XVI, Trans. A. S. M. E.) He shows that in ordinary cases the stretch of the arms will relieve more than one-half of the stress due to bending, perhaps three-quarters.

103. Experiments on Fly-wheels.—In order to determine experimentally the centrifugal tension and bending in rapidly revolving rims, a large number of small fly-wheels have been tested to destruction at the Case School laboratories. In all ten wheels, 15 in. in diameter and twenty-three wheels 2 ft. in diameter have been so tested. An account of some of these experiments may be found in Trans. A. S. M. E., Vol. XX. The wheels were all of cast iron and modeled after actual fly-wheels. Some had solid rims, some jointed rims and some steel spokes.

To give to the wheels the speed necessary for destruction, use was made of a Dow steam turbine capable of being run at any speed up to 10,000 revolutions per minute. The turbine shaft

was connected to the shaft carrying the fly-wheels by a brass sleeve coupling loosely pinned to the shafts at each end in such a way as to form a universal joint, and so proportioned as to break or slip without injuring the turbine in case of sudden stoppage of the fly-wheel shaft.

One experiment with a shield made of 2-in. plank proved that safety did not lie in that direction, and in succeeding experiments with the 15-in. wheels a bomb-proof constructed of 6×12-in. white oak was used. The first experiment with a 24-in. wheel showed even this to be a flimsy contrivance. In subsequent experiments a shield made of 12×12-in. oak was used. This shield was split repeatedly and had to be re-enforced by bolts.

A cast-steel ring about 4 in. thick, lined with wooden blocks and covered with 3-in. oak planking, was finally adopted.

The wheels were usually demolished by the explosion. No crashing or rending noise was heard, only one quick, sharp report, like a musket shot.

The following tables give a summary of a number of the experiments.

TABLE L

FIFTEEN-INCH WHEELS

No.	Bursting speed		Centrifugal tension $=\frac{v^2}{10}$	Remarks
	Rev. per minute	Feet per second $=v$		
1	6,525	430	18,500	Six arms.
2	6,525	430	18,500	Six arms.
3	6,035	395	15,600	Thin rim.
4	5,872	380	14,400	Thin rim.
5	2,925	192	3,700	Joint in rim.
6	5,600 [1]	368	13,600	Three arms.
7	6,198	406	16,500	Three arms.
8	5,709	368	13,600	Three arms.
9	5,709	365	13,300	Thin rim.
10	5,709	361	13,000	Thin rim.

[1] Doubtful.

TABLE LI

Twenty-four-inch Wheels

No.	Shape and size of rim					Weight of wheel, pounds
	Diameter, inches	Breadth inches	Depth, inches	Area, square inches	Style of joint	
11	24	$2\frac{1}{2}$	1.5	3.18	Solid rim	75.25
12	24	$4\frac{1}{16}$	.75	3.85	Internal flanges, bolted	93.
13	24	4	.75	3.85	Internal flanges, bolted	91.75
14	24	4	.75	3.85	Internal flanges, bolted	95.
15	24	$4\frac{1}{16}$	.75	3.85	Internal flanges, bolted	94.75
16	24	1.2	2.1	2.45	Three lugs and links	65.1
17	24	1.2	2.1	2.45	Two lugs and links	65.

TABLE LII

Flanges and Bolts

No.	Flanges			Bolts		
	Thickness, inches	Effective breadth, inches	Effective area, inches	No. to each joint	Diameter, inches	Total tensile strength, pounds
12	$\frac{11}{16}$	2.8	1.92	4	$\frac{5}{16}$	16,000
13	$\frac{11}{16}$	2.75	1.89	4	$\frac{5}{16}$	16,000
14	$\frac{13}{16}$	2.75	2.58	4	$\frac{5}{16}$	16,000
15	$\frac{13}{16}$	2.5	2.34	4	$\frac{3}{4}$	20,000

BY TESTING MACHINE

Tensile strength of cast iron = 19,600 lb. per square inch.
Transverse strength of cast iron = 46,600 lb. per square inch.
Tensile strength of $\frac{5}{16}$ bolts = 4,000 lb.
Tensile strength of $\frac{3}{4}$ bolts = 5,000 lb.

TABLE LIII

Failure of Flanged Joints

No.	Area of rim, square inches	Effect area flanges, square inches	Total strength bolts, pounds	Bursting speed		Cent. tension		Remarks
				Rev. per min.	Ft. per sec. $= v$	Per sq. in. $= \frac{v^2}{10}$	Total lb.	
11	3.18	.....	.....	3,672	385	14,800	47,000	Solid rim.
12	3.85	1.92	16,000	.....	.....	.....	.....	Flange broke.
13	3.85	1.89	16,000	1,760	184	3,400	13,100	Flange broke.
14	3.85	2.58	16,000	1,875	196	3,850	14,800	Bolts broke.
15	3.85	2.34	20,000	1,810	190	3,610	13,900	Flange broke.

TABLE LIV

Linked Joints

No.	Lugs			Links				Rim	
	Breadth inches	Length inches	Area, sq. in.	Number used	Effect breadth, inches	Thickness, inches	Effective area, sq. in.	Max. area, sq. in.	Net area, sq. in.
16	.45	1.0	.45	3	.57	.327	.186	2.45	1.98
17	.44	.98	.43	2	.54	.380	.205	2.45	1.98

BY TESTING MACHINE

Tensile strength of cast iron $= 19,600$.
Transverse strength of cast iron $= 40,400$.
Av. tensile strength of each link $= 10,180$.

TABLE LV

Failure of Linked Joints

No.	Strength of links, pounds	Strength of rim, pounds	Bursting speed		Cent. tension		Remarks
			Rev. per min.	Ft. per sec. $= v$	Per sq. in. $= \frac{v^2}{10}$	Total	
16	30,540	38,800	3,060	320	10,240	25,100	Rim broke.
17	20,360	38,800	2,750	290	8,410	20,600	Lugs and rim broke.

The flanged joints mentioned had the internal flanges and bolts common in large belt wheel rims while the linked joints were such as are common in fly-wheels not used for belts.

Subsequent experiments[1] have given approximately the same results as those just detailed. The highest velocity yet attained has been 424 ft. per second; this is in a solid cast-iron rim with numerous steel spokes. The average bursting velocity for solid cast rims with cast spokes is 400 ft. per second.

Wheels with jointed rims burst at speeds varying from 190 to 250 ft. per second, according to the style of joint and its location. The following general conclusions seem justified by these tests.

1. Fly-wheels with solid rims, of the proportions usual among engine builders and having the usual number of arms, have a sufficient factor of safety at a rim speed of 100 ft. per second if the iron is of good quality and there are no serious cooling strains.

In such wheels the bending due to centrifugal force is slight, and may safely be disregarded.

2. Rim joints midway between the arms are a serious defect and reduce the factor of safety very materially. Such joints are as serious mistakes in design as would be a joint in the middle of a girder under a heavy load.

3. Joints made in the ordinary manner, with internal flanges and bolts, are probably the worst that could be devised for this purpose. Under the most favorable circumstances they have only about one-fourth the strength of the solid rim and are particularly weak to resist bending.

See Fig. 95, which shows the opening of such a joint and the bending of the bolts.

In several joints of this character, on large fly-wheels, calculation has shown a strength less than one-fifth that of the rim.

4. The type of joint known as the link or prisoner joint is probably the best that could be devised for narrow rimmed wheels not intended to carry belts, and possesses, when properly designed, a strength about two-thirds that of the solid rim.

In 1902–04 experiments on four-foot pulleys were conducted by the writer, and the results published.[2]

A cast-iron, whole rim pulley 48 in. in diameter, burst at 1100

[1] Trans. A. S. M. E., Vol. XXIII.

[2] Trans. A. S. M. E., Vol. XXVI.

revolutions per minute or a linear speed of 230 ft. per second, the rupture being caused by a balance weight of $3\frac{1}{2}$ lb. which had been riveted inside the rim by the makers. The centrifugal force of this weight at 1100 revolutions per minute was 2760 lb.

A cast-iron split pulley of the same dimensions burst at a speed of about 600 revolutions per minute, or a linear speed of only 125 ft. per second.

The failure was due to the unbalanced weight of the joint flanges and bolts which were located midway between the arms. Such a pulley is not safe at high belt speeds.

104. Wooden Pulleys.—Experiments on the bursting strength of wooden pulleys were conducted at the Case School laboratories in 1902–3 under the writer's direction.[1]

These are of some interest in view of the use of this material for fly-wheel rims. As noted in Art. 102, the tensile stress in wood due to the centrifugal force is only $\frac{1}{10}$ that of cast iron under similar circumstances. Assuming the tensile strength of the wood to be 10,000 lb. per square inch, and substituting this value in the equation $S=\frac{v^2}{100}$ we have the bursting speed of a wooden pulley $v=1000$ ft. per second nearly.

This for wood without joints.

The 24-in. pulleys tested had wood rims glued up in the usual manner and jointed at two opposite points. The wheels burst at speeds varying from 1700 to 2450 revolutions per minute, or linear rim speeds varying from 178 to 257 ft. per second, thus comparing favorably with cast-iron split pulleys. The rims usually failed at the points where the arms were mortised in, and the stiffening braces at these points did more harm than good. A wooden pulley with solid rim and web remained intact at 4450 revolutions per minute, or 467 ft. per second, a higher speed than that of any cast-iron pulley tried.

105. Rims of Cast-iron Gears.—A toothed wheel will burst at a less speed than a pulley because the teeth increase the weight and therefore the centrifugal force without adding to the strength.

The centrifugal force and therefore the stresses due to the force

[1] *Mchy.*, N. Y., Aug., 1905.

FIG. 95.—OPENING OF RIM JOINT AT HIGH SPEED.

will be increased nearly in the ratio that the weight of rim and teeth is greater than the weight of rim alone.

This ratio in ordinary gearing varies from 1.5 to 1.7. We will assume 1.6 as an average value. Neglecting bending we now have from equation (110)

$$S = 1.6 \times \frac{12wv^2}{g} = \frac{19.2wv^2}{g}. \tag{116}$$

and

$$v = \sqrt{\frac{gS}{19.2w}}$$

$$= 326.2 \text{ ft. per second} \tag{117}$$

Including bending

$$S' = 1.6v^2\left(\frac{D}{tn_2} + \frac{1}{10}\right) \tag{118}$$

As the transverse strength of cast iron by experiment is about double the tensile strength, a larger value of S may be allowed in formulas (114) (115) (118).

In built-up wheels it is better to have the joints come near the arms to prevent the tendency of the bending to open the joints, and the fastenings should have the same tensile strength as the rim of the wheel.

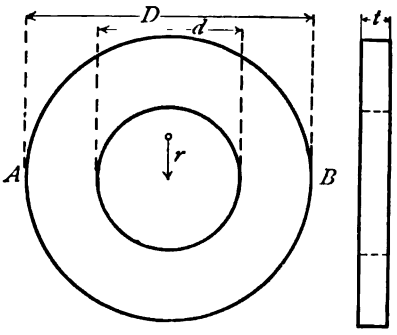

FIG. 96.

106. Rotating Discs.—The formulas derived in Art. 102 will only apply in the case of thin rims and cannot be used for discs or for rims having any considerable depth. The determination of the stresses in a rotating disc is a complicated and difficult problem, if the material is regarded as perfectly elastic.

A rational solution of this problem may be found in Stodola's Steam Turbines, pp. 157–69. For the purposes of this treatise an approximate solution is preferred, the elasticity of the metal being neglected. This method of treatment is much simpler,

and as the metals used are imperfectly elastic (especially the cast metals) the results obtained will probably be as reliable as any—for practical use.

The following discussion is an abstract of one given by Mr. A. M. Levin in the *Am. Mach.*[1] the notation being changed somewhat.

107. Plain Discs.—Let Fig. 96 represent a ring of uniform thickness t, having an external diameter D and an internal diameter d, all in inches.

Let v = external velocity in feet per second

Let a = angular velocity $= \frac{24v}{D}$

r = radius to center of gravity of half ring in feet

w = weight of metal per cubic inch.

The value of r for a half-ring is easily proved to be:

$$\frac{2}{3\pi} \cdot \frac{D^3-d^3}{D^2-d^2} \text{ in inches}$$

or

$$r = \frac{1}{18\pi} \cdot \frac{D^3-d^3}{D^2-d^2} \text{ in feet.}$$

The weight of the half-ring is:

$$W = \frac{\pi}{8}(D^2-d^2)tw$$

and its centrifugal force:

$$C = \frac{Wa^2r}{g} = \frac{a^2tw(D^3-d^3)}{144g}. \tag{119}$$

Substituting for a its value in terms of v:

$$C = \frac{4twv^2(D^3-d^3)}{gD^2}. \tag{120}$$

Now if we assume the stress on the area at AB due to the centrifugal force to be uniformly distributed: (and here lies the approximation) then will the tensile stress on the section be

$$S = \frac{C}{(D-d)t} = \frac{4wv^2(D^2+Dd+d^2)}{gD^2}. \tag{121}$$

[1] *Am. Mach.*, Oct. 20, 1904.

For a solid disc:

$$S_{d=0}=\frac{4wv^2}{g}. \tag{122}$$

For a thin ring:

$$S_{d=D}=\frac{12wv^2}{g} \tag{123}$$

or the same as in equation (110).

If the metal be perfectly elastic, Stodola's formulas give $S=\frac{9wv^2}{g}$ as the stress near the center when d approaches $0-$ or more than twice the value given in (122). In view of the imperfect elasticity of the metals used the true value will probably be between these two. This value should be determined by experiment.

108. Conical Discs.—Let Fig. 97 represent a ring whose thickness varies uniformly from the inner to the outer circumference and whose dimensions are as follows:

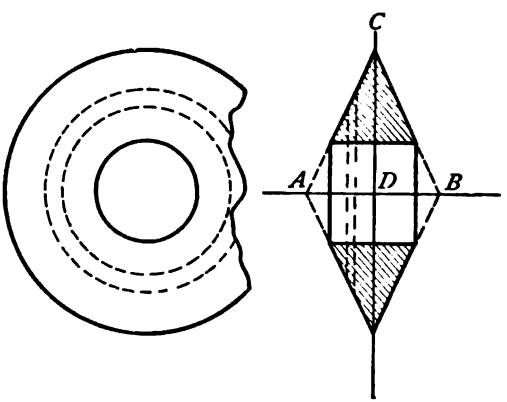

FIG. 97.

D = outer diameter in inches
d = inner diameter in inches
b = breadth of ring at inner circumference
m = tangent of angle of slant CAD

Then $m=\frac{D-d}{b}$ or $b=\frac{D-d}{m}$.

By cutting the ring into slices perpendicular to the axis, finding the centrifugal force for each slice and then integrating between D and d, the centrifugal force of the half-ring is found to be:

$$C=\frac{wv^2(D^4+3d^4-4Dd^3)}{mgD^2} \tag{124}$$

The area on the line AB to resist the centrifugal force is:

$$\frac{(D-d)^2}{2m} \text{ and } S=\frac{2wv^2(D^4+3d^4-4Dd^3)}{gD^2(D-d)^2}. \tag{125}$$

When $d=0$:

$$S=\frac{2wv^2}{g}. \tag{126}$$

or a stress one-half that of a plain flat disc.

109. Discs with Logarithmic Profile.—A form of disc sometimes used for steam turbines consists of a solid of revolution generated by a curve of the equation

$$y=a \log \frac{x}{b}$$

revolving around the x-axis.

Mr. Levin investigates two curves of this character:

$$y=\log x \text{ and } y=2 \log \frac{x}{3}$$

and finds the stresses to be respectively:

When $a=b$ $$S=1.5\frac{wv^2}{g}. \tag{127}$$

When $a=\frac{2}{3}b$ $$S=1.2\frac{wv^2}{g}. \tag{128}$$

The general equation for S in this case is:

$$S=96\frac{wv^2}{g}\cdot\frac{a^2}{D^2} \tag{129}$$

and in deriving the formulas (127) and (128) D is assumed as $8a$ and as $9a$ respectively.

110. Bursting Speeds.—It will be seen that all the formulas for centrifugal stress may be reduced to the general form:

$$S = k\frac{wv^2}{g} \tag{130}$$

where k is a constant depending upon the shape of the rotating body.

The following table gives the values of $v = \sqrt{\frac{gS}{kw}}$, the bursting speed of rim in feet per second, for different materials and different shapes.

TABLE LVI

BURSTING SPEEDS IN FEET PER SECOND

Metal	Weight per cubic inch	Tensile strength	Values of v				
			Thin ring	Perforated disc (Stodola)	Flat disc	Taper disc	Logarithmic disc
	w	S	$k=12$	$k=9$	$k=4$	$k=2$	$k=1.5$
Cast iron	.26	18,000	430	500	745	1,050	1,215
Manganese bronze	.315	60,000	715	825	1,240	1,750	2,050
Soft steel	.28	60,000	760	880	1,315	1,860	2,140

111. Tests of Discs.—During the years 1906–07, certain tests were made on cast-iron discs in the laboratories of the Case School of Applied Science by senior students, Messrs. Baxter, Brown, Goss and Jeffrey.

The discs experimented upon were from 16 to 18 in. in diameter and from ½ to 1 in. in thickness and were cast from a soft gray iron, clean and free from defects. The average tensile strength of the iron was 15,750 lb. per square inch and the transverse strength 37,800 lb. per square inch. All of the discs were finished to insure good balancing.

They were tested to bursting by centrifugal force with the apparatus before described in the article on Fly-wheels, the speed being measured by a reducing gear and counter. Each of the discs had a 1-in. hole through the center; some had hubs 2 in.

in diameter and some were plain as noted in the following table which gives a résumé of the results.

TABLE LVII

BURSTING SPEED OF CAST-IRON DISCS

Diameter, inches	Weight, pounds	Thickness, inches	Length of hub, inches	Bursting speed r.p.m.	Calculated	
					Velocity of rim, ft. per sec.	$k=\frac{Sg}{wv^2}$
18	.....	.418	2.00	7,755	610	5.25
18	.....	.775	2.00	7,125	560	6.24
18	.....	.573	2.00	8,700	683	4.19
16	28.75	.562	2.125	9,282	650	4.62
16	27.25	.514	2.125	9,486	660	4.49
16	55.50	1.086	None	9,690	676	4.28
16	48.00	.951	None	8,262	577	5.86
18	61.25	.953	None	8,364	656	4.55
18	47.75	.715	2.00	9,180	720	3.76
16	42.00	.820	1.57	8,874	620	5.08
16	45.00	.873	1.62	9,792	685	4.16
18	65.50	.961	1.85	9,792	770	3.29

Average value of $k=4.64$.

The presence or absence of a hub has no apparent effect on the strength. The value of k, as was to have been expected is slightly greater than the 4 given in formula (122).

PROBLEMS

1. Determine bursting speed in revolutions per minute, of a gear 42 in. in diameter with six arms, if the thickness of rim is .75 in.

(1) Considering centrifugal tension alone.

(2) Including bending of rim due to centrifugal force assuming that three-fourths the stress due to bending is relieved by the stretching of the arms.

2. Design a link joint for the rim of a fly-wheel, the rim being 8 in. wide, 12 in. deep and 18 ft. mean diameter, the links to have a tensile strength of 65,000 lb. per square inch. Determine the relative strength of joint and the probable bursting speed.

3. Discuss the proportions of one of the following wheels in the laboratory and criticise dimensions.

(a) Fly-wheel, Allis engine.

(b) Fly-wheel, Fairbanks gas engine.

(c) Fly-wheel, air compressor.

(d) Fly-wheel, Buckeye engine.

(e) Fly-wheel, pumping engine.

4. Determine the value of C in formula (124) by calculation.

5. A Delaval turbine disc is made of soft steel in the shape of the logarith-

mic curve without any hole at the center. Determine the probable bursting speed if the disc is 12 in. in diameter.

6. A wheel rim is made of cast iron in the shape of a ring having diameters of 4½ ft. and 6 ft., inside and outside. Determine probable bursting speed.

7. Substitute the value for centrifugal force in place of internal pressure in Barlow's formula (b) Art. 22, and derive a value for S in a rotating ring. Test this for $d=\frac{D}{2}$ and compare with formulas in preceding article.

REFERENCES

Resistance of Air to Fly-wheels. *Cass.*, Feb., 1903; Mar., 1903.
Shields to Reduce Windage. *Power*, Dec., 1903.
Testing Pit at Purdue University. *Am. Mach.*, Aug. 26, 1909.
High Efficiency Joint for Rim. *Am. Mach.*, Feb. 28, 1907; Apr. 4, 1907; Apr. 11, 1907.
Rolling Mill Fly-wheels. Tr. A. S. M. E., Vol. XX, p. 944.

CHAPTER XII

TRANSMISSION BY BELTS AND ROPES

112. Friction of Belting.—The transmitting power of a belt is due to its friction on the pulley, and this friction is equal to the difference between the tensions of the driving and slack sides for the belt.

Let w = width of belt

T_1 = tension of driving side

T_2 = tension of slack side

R = friction of belt

$= T_1 - T_2$

f = coefficient of friction between belt and pulley

θ = arc of contact in circular measure.

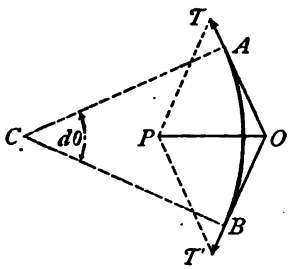

FIG. 98.

The tension T at any part of the arc of contact is intermediate between T_1 and T_2.

Let AB Fig. 98 be an indefinitely short element of the arc of contact, so that the tensions at A and B differ only by the amount dT.

dT will then equal the friction on AB which we may call dR.

Draw the intersecting tangents OT and OT' to represent the tensions and find their radial resultant OP. Then will OP represent the normal pressure on the arc AB which we will call P.

$$< OTP = < ACB = d\theta$$

$$\therefore P = Td\theta.$$

The friction on AB is

$$fP = fTd\theta$$

or

$$dT = dR = fTd\theta$$

and

$$fd\theta = \frac{dT}{T}.$$

Integrating for the whole arc θ:

$$f\theta = \int_{T_2}^{T_1} \frac{dT}{T} = \log_e \frac{T_1}{T_2}$$

$$\frac{T_1}{T_2} = e^{f\theta}$$

$$T_2 = \frac{T_1}{e^{f\theta}} = T_1 e^{-f\theta}$$

$$R = T_1 - T_2 = T_1(1 - e^{-f\theta}). \tag{131}$$

The value of f varies with the nature of the materials used, the tension and slip of the belt and the speed of the pulleys. If we denote the expression $(1 - e^{-f\theta})$ by C, then for different values of f and the arc of contact, C has the following values.

ARC OF CONTACT

Values of f	90	120	150	180	200
.20	.270	.342	.408	.467	.503
.25	.325	.407	.480	.544	.582
.30	.376	.467	.544	.610	.649
.35	.423	.520	.600	.667	.705
.40	.467	.567	.649	.715	.753
.45	.507	.610	.692	.757	.792

The friction or force transmitted by a belt per inch of width is then

$$R = CT_1 \tag{132}$$

and T_1 must not exceed the safe working tensile strength of the material.

A handy rule for calculating belts assumes $C = .5$ which means that the force which a belt will transmit under ordinary conditions is one-half its tensile strength.

The conditions assumed above are only average ones and the formulas are only approximate for any particular case. The coefficient of friction varies with the materials used for pulleys and belts, with the tension, the speed and the amount of slip.

The sum of the tensions is not constant as may be readily proved by experiment. Mr. Barth shows from theoretical considerations of the elasticity of the belt that approximately:[1]

$$\sqrt{T_1}+\sqrt{T_2}=2\sqrt{T_o}$$

where T_o = initial tension (unloaded), or that the sum of the square roots of the two tensions is a constant. For instance, if $T_o=100$, we have

$$\sqrt{T_1}+\sqrt{T_2}=20$$

If we assume values for T_1 and solve for T_2, we have:

T_1	T_2	T_1+T_2
121	81	202
144	64	208
169	49	218
196	36	232

and the sum of the tensions increases as the load increases.

113. Slip of Belt.—Mr. Wilfred Lewis in his experiments on belts[2] found that the coefficient of friction varied with the slip, increasing as the slip increased, so that as the load became heavier the slipping of the belt increased its driving power and prevented further slip.

A distinction must be made between slip due to the load and slip, or "creep" as it is usually called, due to the stretching of the belt.

As has been already explained, the tension of a belt varies in passing over the driving pulley from T_1 to T_2 and in passing over the driven pulley from T_2 to T_1. The belt is elastic and stretches more or less according to the tension, so that its length is continually changing as it passes over either pulley. This produces a "creep" or relative motion of the belt on the pulley, positive on one pulley and negative on the other; *i.e.*, the belt gains on the driven pulley and loses on the driving pulley.

Experiments by Professor Bird[3] show a creep under ordinary

[1] Trans. A. S. M. E., 1909.
[2] Trans. A. S. M. E., 1886.
[3] Trans. A. S. M. E., 1905.

conditions of about 1 per cent and a working modulus of elasticity for leather belting of from 12,000 to 30,000 with an average of 20,000. Slip due to increase of load will be added to the creep.

Tests of belting reported in 1911 by Professor W. M. Sawdon[1] indicate a marked variation in the slip of belts without any apparent change in the conditions.

With the belt tension, the load and the speed remaining the same, the slip would sometimes remain constant at 1 or 2 per cent for 30 or 35 minutes and then suddenly rise to 10 or 15 per cent.

In these experiments it was found that the load capacity of a leather belt on pulleys of various materials was as follows, cast iron being taken as a standard:

Cast iron	100
Wood	105
Paper	137

The effect of cork inserts was to increase the driving capacity of the cast-iron pulleys 10 to 12 per cent. The wood pulleys received no benefit from cork inserts while the capacity of the paper pulleys was diminished by the cork.

The wood pulleys showed a small overload capacity, being inferior to the cast iron at slips exceeding 3 or 4 per cent.

114. Coefficient of Friction.—Mr. Barth, as a result of the experiments of Mr. Lewis and an exhaustive study of the whole subject, suggests the following formulas for the coefficient:

$$f=0.6-\frac{2}{4+v} \tag{133}$$

$$f=0.54-\frac{140}{500+V} \tag{134}$$

where v is the average velocity of sliding of belt on pulley or one-half the total slip in feet per minute and V is the velocity of belt in feet per minute.

[1] Proc. Nat. Ass'n of Cotton Manufacturers, Sept., 1911.

Values of f from equation (133) are:

$v=$	$f=$	
2	0.267	See Art. 112.
4	0.350	
6	0.400	
8	0.433	

Values of f from equation (134) are:

$V=$	$f=$
400	0.384
800	0.432
1600	0.473
3200	0.512

It will be noted that these values of f are larger than that assumed in Art. 112 and furthermore that some definite relation is assumed to exist between the slip of the belt and its speed.

Equating the two values of f in (133) and (134) and neglecting the difference in the constant terms, we have approximately:

$$v=3.14+.014V \tag{135}$$

or a total slip of about 6 ft. per minute plus about 3 per cent of the linear velocity.

115. Strength of Belting.—The strength of belting varies widely and only average values can be given. According to experiments made by the author good oak tanned belting has a breaking strength per inch of width as follows:

	Single	Double
Solid leather	900 lb.	1,400 lb.
Where riveted	600 lb.	1,200 lb.
Where laced	350 lb.	.....

Canvas belting has approximately the same strength as leather. Tests of rubber coated canvas belts 4-ply, 8 in. wide, show a tensile strength of from 840 lb. to 930 lb. per inch of width.

116. Taylor's Experiments.—The experiments of Mr. F. W. Taylor, as reported by him in Trans. A. S. M. E., Vol. XV, afford the most valuable data now available on the performance of belts in actual service.

These experiments were carried on during a period of nine years at the Midvale Steel Works. Some of Mr. Taylor's conclusions are as follows:

1. Narrow double belts are more economical than single ones of a greater width.
2. All joints should be spliced and cemented.
3. The most economical belt speed is from 4000 to 4500 ft. per minute.
4. The working tension of a double belt should not exceed 35 lb. per inch of width, but the belt may be first tightened to about double this.
5. Belts should be cleansed and greased every six months.
6. The best length is from 20 to 25 ft. between centers.

117. Rules for Width of Belts.—It will be noticed that Mr. Taylor recommends a working tension only $\frac{1}{30}$ to $\frac{1}{40}$ the breaking strength of the belt. He justifies this by saying that belts so designed gave much less trouble from stoppage and repairs and were consequently more economical than those designed by the ordinary rules.

It must be remembered that a belt which is strained to an excessive tension will not retain this tension long, but will stretch until the tension becomes such as the belt will carry comfortably.

If the belt is under size for the required load this will cause slipping and necessitate further tightening and so on. There will thus be continual loss of time, so that such a belt is uneconomical although theoretically of ample strength.

In the following formulas 50 lb. per inch of width is allowed for double belts and 30 lb. for single belts. These are suitable values for belts which are not running continuously. The formulas may be easily changed for other thicknesses and for other values of CT_1.

Let HP = horse-power transmitted

D = diameter of driving pulley in inches

N = number revolutions per minute of pulley.

The moment of force transmitted by belt is

$$\frac{RD}{2}=\frac{CT_1wD}{2}=T$$

and
$$HP=\frac{TN}{63025}=\frac{CT_1wDN}{126050} \tag{136}$$

Substituting the values assumed for CT_1 and solving for w:

$$\text{Single belts } w=4200\frac{HP}{DN}. \tag{137}$$

$$\text{Double belts } w=2500\frac{HP}{DN}. \tag{138}$$

The most convenient rules for belting are those which give the horse-power of a belt in terms of the surface passing a fixed point per minute.

In formula (136) $$HP=\frac{CT_1wDN}{126050}$$

we will substitute the following:

$$W=\text{width of belt in feet}=\frac{w}{12}$$

$$V=\text{velocity in ft. per min.}=\frac{\pi DN}{12}$$

or
$$HP=\frac{144CT_1WV}{126050\pi}.$$

Substituting values of C and T_1 as before and solving for WV = square feet per minute we have approximately:

$$\text{Single belts } WV=90HP. \tag{139}$$

$$\text{Double belts } WV=55HP. \tag{140}$$

118. Speed of Belting.—As in the case of pulley rims, so in that of belts a certain amount of tension is caused by the centrifugal force of the belt as it passes around the pulley.

From equation (110) $$S=\frac{12wv^2}{g}$$

where v = velocity in feet per second
w = weight of material per cubic inch
S = tensile stress per square inch.

To make this formula more convenient for use we will make the following changes in the contsants:

Let V = velocity of belt in ft. per minute $= 60v$
w = weight of ordinary belting
= .032 lb. per cubic inch
S_1 = tensile stress per inch width, caused by centrifugal force
= about $\frac{3}{16}$ S for single belts.

Then
$$v = \frac{V}{60}$$
$$S = \frac{16S_1}{3}$$

Substituting these values in (110) and solving for S_1

$$S_1 = \frac{V^2}{1610000} \tag{141}$$

The speed usually given as a safe limit for ordinary belts is 3000 ft. per minute, but belts are sometimes run at a speed exceeding 6000 ft. per minute.

Substituting different values of V in the formula we have:

$V = 3000$	$S_1 = 5.59$ lb.
$V = 4000$	$S_1 = 9.94$ lb.
$V = 5000$	$S_1 = 15.53$ lb.
$V = 6000$	$S_1 = 22.36$ lb.

The values of S_1 for double belts will be nearly twice those given above. At a speed of 5000 ft. per minute the maximum tension per inch of width on a single belt designed by formula (137), if we call $C = .5$, will be:

$$(30 \times 2) + 15. = 75 \text{ lb.}$$

giving a factor of safety of eight or ten at the splices.

In a similar manner we find the maximum tension per inch of width of a double belt to be:

$$(50 \times 2) + 30 = 130 \text{ lb.}$$

and the margin of safety about the same as in single belting.

A double belt is stiffer than a single one and should not be

used on pulleys less than 1 ft. in diameter. Triple belts can be used successfully on pulleys over 20 in. in diameter.

119. Manila Rope Transmission.—Ropes are sometimes used instead of flat belts for transmitting power short distances. They possess the following advantages: they are cheaper than belts in first cost; they are flexible in every direction and can be carried around corners readily. They have, however, the disadvantage of being less efficient in transmission than leather belts and less durable; they are also somewhat difficult to splice or repair.

There are two systems of rope driving in common use: the English and the American. In the former there are as many separate ropes as there are grooves in one pulley, each rope being an endless loop always running in one groove.

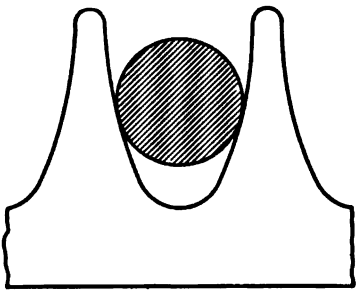

FIG. 99.

In the American system one continuous rope is used passing back and forth from one groove to another and finally returning to the starting-point.

The advantage of the English system consists in the fact that one of the ropes may fail without causing a breakdown of the entire drive, there usually being two or three ropes in excess of the number actually necessary. On the other hand the American system has the advantage of a uniform regulation of the tension on all the plies of rope. The guide pulley, which guides the last slack turn of rope back to the starting-point, is usually also a tension pulley and can be weighted to secure any desired tension. The English method is most used for heavy drives from engines to head shafts; the American for lighter work in distributing power to the different rooms of a factory. The grooves in the pulleys for manila or cotton ropes usually have their sides inclined at an angle of about 45 degrees, thus wedging the rope in the groove.

The Walker groove has curved sides as shown in Fig. 99, the curvature increasing toward the bottom. As the rope wears and

stretches it becomes smaller and sinks deeper in the groove; the sides of the groove being more oblique near the bottom, the older rope is not pinched so hard as the newer and this tends to throw more of the work on the latter.

120. Strength of Manila Ropes.—The formulas for transmission by ropes are similar to those for belts, the values for S and V being changed. The ultimate tensile strength of manila and hemp rope is about 10,000 lb. per square inch.

To insure durability and efficiency it has been found best in practice to use a large factor of safety. Prof. Forrest R. Jones in his book on Machine Design recommends a maximum tension of 200 d^2 pounds where d is the diameter of rope in inches. This corresponds to a tensile stress of 255 lb. per square inch or a factor of safety of about 40.

The value of f for manila on metal is about 0.12, but as the normal pressure between the two surfaces is increased by the wedge action of the rope in the groove we shall have the apparent value of f:

$$f^1 = f \div \sin \frac{\alpha}{2} \text{ where}$$

$$\alpha = \text{angle of groove,}$$

For $\alpha = 45°$ to $30°$

f^1 varies from 0.3 to 0.5 and these values should be used in formula (134).

$\left(1 - e^{-f\theta}\right)$ in this formula, for an arc of contact of 150 degrees, becomes either .54 or .73 according as f^1 is taken 0.3 or 0.5.

If T_1 is assumed as 250 lb. per square inch, the force R transmitted by the rope varies from 135 lb. to 185 lb. per square inch area of rope section.

The following table gives the horse-power of manila ropes based on a maximum tension of 255 lb. per square inch.

TABLE LVIII

Table of the horse-power of transmission rope, reprinted from the transactions of the American Society of Mechanical Engineers, Vol. XII, page 230, Article on "Rope Driving" by C. W. Hunt.

The working strain is 800 lb. for a 2-in. diameter rope and is the same at all speeds, due allowance having been made for loss by centrifugal force.

Diameter rope, inches	Speed of the rope in feet per minute										Smallest diameter pulleys, inches
	1,500	2,000	2,500	3,000	3,500	4,000	4,500	5,000	6,000	7,000	
$\frac{3}{4}$	3.3	4.3	5.2	5.8	6.7	7.2	7.7	7.7	7.1	4.9	30
$\frac{7}{8}$	4.5	5.9	7.0	8.2	9.1	9.8	10.8	10.8	9.3	6.9	36
1	5.8	7.7	9.2	10.7	11.9	12.8	13.6	13.7	12.5	8.8	42
$1\frac{1}{4}$	9.2	12.1	14.3	16.8	18.6	20.0	21.2	21.4	19.5	13.8	54
$1\frac{1}{2}$	13.1	17.4	20.7	23.1	26.8	28.8	30.6	30.8	28.2	19.8	60
$1\frac{3}{4}$	18.0	23.7	28.2	32.8	36.4	39.2	41.5	41.8	37.4	27.6	72
2	23.1	30.8	36.8	42.8	47.6	51.2	54.4	54.8	50.0	35.2	84

121. Cotton Rope Transmission.—Cotton rope is more expensive than manila in its first cost, but has a greater efficiency and a longer life than its rival. Instances are given where cotton ropes have been in continuous service for periods of fifteen, twenty-five and even thirty years. The rope of three strands without a core is most flexible and durable as there is good contact between the working strands and no waste room.

Mr. Edward Kenyon gives the following values for the power which can be safely transmitted by good three-strand cotton ropes running on pulleys not less than thirty times their respective diameters (English system).[1] (See next page.)

The horse-power at any other speed will be in proportion to the speed. It will also be noticed that the horse-power is proportional to the square of the diameter of the rope. Mr. Kenyon gives figures for the speed as high as 7000 ft. per minute, and reports actual installations where ropes are running successfully at this speed. He makes no allowance for centrifugal force and denies that this has any appreciable effect on the driving power or the durability.

Mr. Kenyon's figures have reference only to ropes used in single plies as in the English system.

[1] *Am. Mach.*, July 8, 1909.

TABLE LIX

HORSE-POWER OF COTTON ROPES—VELOCITY 1000 FT. PER MINUTE

Diameters in inches		Horse-power
Rope	Smallest pulley	
1	30	3.3
$1\frac{1}{8}$	34	4.1
$1\frac{1}{4}$	38	5.1
$1\frac{3}{8}$	41	6.1
$1\frac{1}{2}$	45	7.4
$1\frac{5}{8}$	49	8.6
$1\frac{3}{4}$	53	10.
$1\frac{7}{8}$	57	11.5
2	60	13.

He calls especial attention to the use of casing in high-speed pulleys to reduce the air resistance.

122. Wire Rope Transmission.—Wire ropes have been used to transmit power where the distances were too great for belting or hemp rope transmission. The increased use of electrical transmission is gradually crowding out this latter form of rope driving.

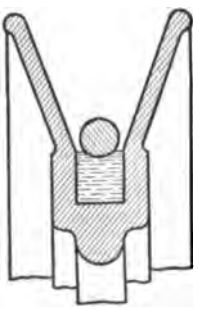

FIG. 100.

For comparatively short distances of from 100 to 500 yd. wire rope still offers a cheap and simple means of carrying power.

The pulleys or wheels are entirely different from those used with manila ropes.

Fig. 100 shows a section of the rim of such a pulley. The rope does not touch the sides of the groove but rests on a shallow depression in a wooden, leather or rubber filling at the bottom. The high side flanges prevent the rope from leaving the pulley when swaying on account of the high speed.

The pulleys must be large, usually about 100 times the diam-

eter of rope used, and run at comparatively high speeds. The ropes should not be less than 200 ft. long unless some form of tightening pulley is used. Table LX is taken from Roebling.

Long ropes should be supported by idle pulleys every 400 ft.

TABLE LX

Transmission of Power by Wire Rope

Showing necessary size and speed of wheels and rope to obtain any desired amount of power.

Diameter of wheel in feet	Number of revolutions	Diameter of rope	Horse-power	Diameter of wheel in feet	Number of revolutions	Diameter of rope	Horse-power
4	80	5-8	3.3	10	80	11-16	58.4
	100	5-8	4.1		100	11-16	73.
	120	5-8	5.		120	11-16	87.6
	140	5-8	5.8		140	11-16	102.2
5	80	7-16	6.9	11	80	11-16	75.5
	100	7-16	8.6		100	11-16	94.4
	120	7-16	10.3		120	11-16	113.3
	140	7-16	12.1		140	11-16	132.1
6	80	1-2	10.7	12	80	3-4	99.3
	100	1-2	13.4		100	3-4	124.1
	120	1-2	16.1		120	3-4	148.9
	140	1-2	18.7		140	3-4	173.7
7	80	9-16	16.9	13	80	3-4	122.6
	100	9-16	21.1		100	3-4	153.2
	120	9-16	25.3		120	3-4	183.9
8	80	5-8	22.	14	80	7-8	148.
	100	5-8	27.5		100	7-8	185.
	120	5-8	33.0		120	7-8	222.
9	80	5-8	41.5	15	80	7-8	217.
	100	5-8	51.9		100	7-8	259.
	120	5-8	62.2		120	7-8	300.

PROBLEMS

1. Design a main driving belt to transmit 200 horse-power from a belt wheel 18 ft. in diameter and making 80 revolutions per minute. The belt to be double leather without rivets.

2. Investigate driving belt on an engine and calculate the horse-power it is capable of transmitting economically.

3. Calculate the total maximum tension per inch of width due to load and to centrifugal force of the driving belt on the motor used for driving machine shop, assuming the maximum load to be 10 horse-power.

4. Design a manila rope drive, English system, to transmit 400 horse-power, the wheel on the engine being 20 ft. in diameter and making 60 revolutions per minute. Use Hunt's table and then check by calculating the centrifugal tension and the total maximum tension on each rope. Assume $S = \frac{v^2}{80}$ where $v =$ feet per second.

5. Design a wire rope transmission to carry 150 horse-power a distance of one-quarter mile using two ropes. Determine working and maximum tension on rope, length of rope, diameter and speed of pulleys and number of supporting pulleys.

REFERENCES

Manufacture of Belting. *Power*, Feb., 1903.
Steel Belts. *Am. Mach.*, Jan. 24, 1908; *Eng. News*, Oct. 14, 1909.
Belts *vs.* Ropes. *Power*, Dec. 1, 1908.
Lewis' Experiments on Belts. Tr. A. S. M. E., Vol. VII, p. 549.
Transmission of Power by Belting. Tr. A. S. M. E., Vol. XX, p. 466; Vol. XXXI, p. 29.
Various Systems of Rope Transmission. *Am. Mach.*, July 8, 1909.
Rope Driving. (Hunt.) Tr. A. S. M. E., Vol. XII, p. 230.
Working Load for Ropes. Tr. A. S. M. E., Vol. XXIII, p. 125.

CHAPTER XIII

DESIGN OF TOGGLE-JOINT PRESS

123. Introductory Statement.—In discussing the subject of Machine Design much time may be saved by assuming some simple machine and illustrating methods in design by a fairly complete analysis of all the important theoretical calculations. Such a layout at once gives the scope of the work and protects the beginner from so much "working in the dark." An assignment may then be made, differing in a lesser or greater degree from the illustrated design and a complete analysis required of all parts of the machine. After the student's experience with the first design he will need the second one developed less elaborately and possibly the third one not at all.

Design No. 1 is meant especially to cover static forces, *i.e.*, simple applications of members in tension, compression, flexure and shear. A good illustration of this is the toggle-joint press. Machines of this class are sometimes used in forming thin sheets of copper and brass into articles for ornamental purposes, consequently it is a useful tool. Plates C-1, C-2, and C-3 show a design of a small machine and are inserted to give an idea as to the arrangement of the drawings. The design was worked up on three 12 in. × 18 in. sheets; two of details and one assembly view.

It is urged that the designer regard these sheets merely as illustrative of a good drawing room job and that, from the standpoint of ideas, he will cultivate originality and make a design as nearly independent as possible.

Alternative Designs will be found at the end of this chapter. These may be substituted for the regular designs if preferred.

In designing a complete machine each part should be worked up as an independent unit but with all available information as to its relation to the other parts composing the machine. Before attempting to develop any individual part, the designer should have a good idea of what the machine looks like. Free-hand

sketching should be insisted upon. These sketches when satisfactory should become a part of the report and be handed in with the finished drawings. Calculate by rational formula every part that will admit of such treatment. Where the conditions of stresses are not well known apply empirical rules and the best approximations possible. In any case the judgment of the designer must be used to modify and check even the best rational or empirical rules. Theoretical deductions should not be minimized but good judgment should be emphasized. *All calculations should be saved until the entire design is finished and these should be kept in the exact order of development.* Sometimes a part that is at first considered wrong may later be found to be correct and recalculation is avoided. Occasionally it is necessary to review part of the calculations to prove some part of the design. Where the theoretical work is neatly made and logically arranged this may be done without much loss of time. In the analysis of the forces and the calculations of the various parts a high degree of refinement should be aimed at for the sake of showing how principles are applied, even though the illustrative piece may not demand a very thorough analysis. The object sought is not so much that a machine be designed by the student as that he be fortified with the ability to analyze a problem and that he be able to apply to it the correct principles of design.

124. Drawings.—The following dimensions are suggested for the cutting sizes of the sheets. The designer is at liberty to make his own selection from these sizes. It is suggested, however, that the sheets be taken as small as will admit of a clear and distinct set of drawings.

24 in. × 36 in.—Size A
18 in. × 24 in.—Size B
12 in. × 18 in.—Size C
9 in. × 12 in.—Size D

Scale.—Any scale may be taken which will show clearly all the details and give a good arrangement on the sheet. Details may have different scales on the same sheet if so desired. When this is done each detail should have the scale given.

Border Line.—A margin of $\frac{1}{4}$ in. should be left between the border line and the edge of the finished sheet on the top, bottom and right end, and $\frac{1}{2}$ in. on the left end to allow for punching and fastening.

Name Plate.—Make the name plate or title at the lower right-hand corner to cover a space about $2\frac{1}{4}$ in. $\times 3\frac{1}{2}$ in. If any other standard corner is preferred other dimensions may be substituted. No border line need be drawn around the name plate. It would be well for each designer to make a standard corner plate to be used below the various tracings when working up this part.

All drawings will be carefully worked up in pencil and turned in to the instructor. The instructor will give them to another designer who will be responsible for the checking. Checking will be done in the form of notes on a separate paper and attached to the drawings. These notes and drawings will then be returned to the designer for approval and corrections. When the designer traces his drawings, or such part of them as may be selected by the instructor, he will obtain the signature of the checker to them and submit the same with the checker's notes to the instructor for approval.

Each designer should have experience not only in planning and executing well his own designs, but he should take up designs of other men and offer suggestions and criticisms upon their work. One way to obtain this experience has been suggested above.

In checking up the work of another man the following points should be observed:

(1) General appearance of the design relative to workmanship and execution, arrangement of drawings, notes, dimensions, etc.

(2) General design relative to proportion, strength and arrangement of parts. This is to be merely the checker's impression and need not require the checking of the original calculations.

No drawing should be retained longer than one exercise and at the completion of the checking should be returned to the designer. It is estimated that any set of drawings may be checked in this way within two hours' time. No notes or marks will be made on the drawings but special paper will be provided

for this purpose. In looking over the drawings finally, the instructor will give credit to the work of the checker as well as to that of the designer.

In all this work some standard text on mechanical drawing should be adopted as reference concerning arrangement of views, sectioning, cross-hatching, lettering, and the like.

Every dimension should be clearly shown so that no measurements need be taken by scale from the drawing.

All dimensions should be given in round vertical figures, heavy enough to print well. No diagonal-barred fractions, thin or doubtful figures should be accepted.

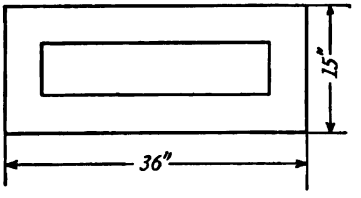

Fig. 101.

All dimensions should be given in inches.

All dimension lines should be made as light as will insure good printing and should have a central space for figures.

All dimensions should read in the direction of the arrows.

Avoid crowding the dimensions to the center of any detail. A much better way is by the use of projected lines as shown by Fig. 101.

All detailed pieces should be accompanied by a *shop note* or *call* as "C. I. One wanted"; "M. S. Two wanted"; "Finish all over;" "Turned for a shrinking fit;" etc., etc.

The following abbreviations will be considered satisfactory in these calls:

C. S.	Cast steel.	f.	Finish (see sheets of details).
C. I.	Cast iron.	B. b. t.	Babbitt metal.
W. I.	Wrought iron.	D.	Diameter.
M. S.	Machine steel.	R.	Radius.

125. Calculations.—Each designer is expected to draw up a report in parallel with the design. This report should contain such free-hand sketches as relate to the calculations, also a full report of the calculated sizes and accepted sizes of the different parts of the design, and be submitted in a manila cover with the finished tracings and drawings.

PLATE C 2

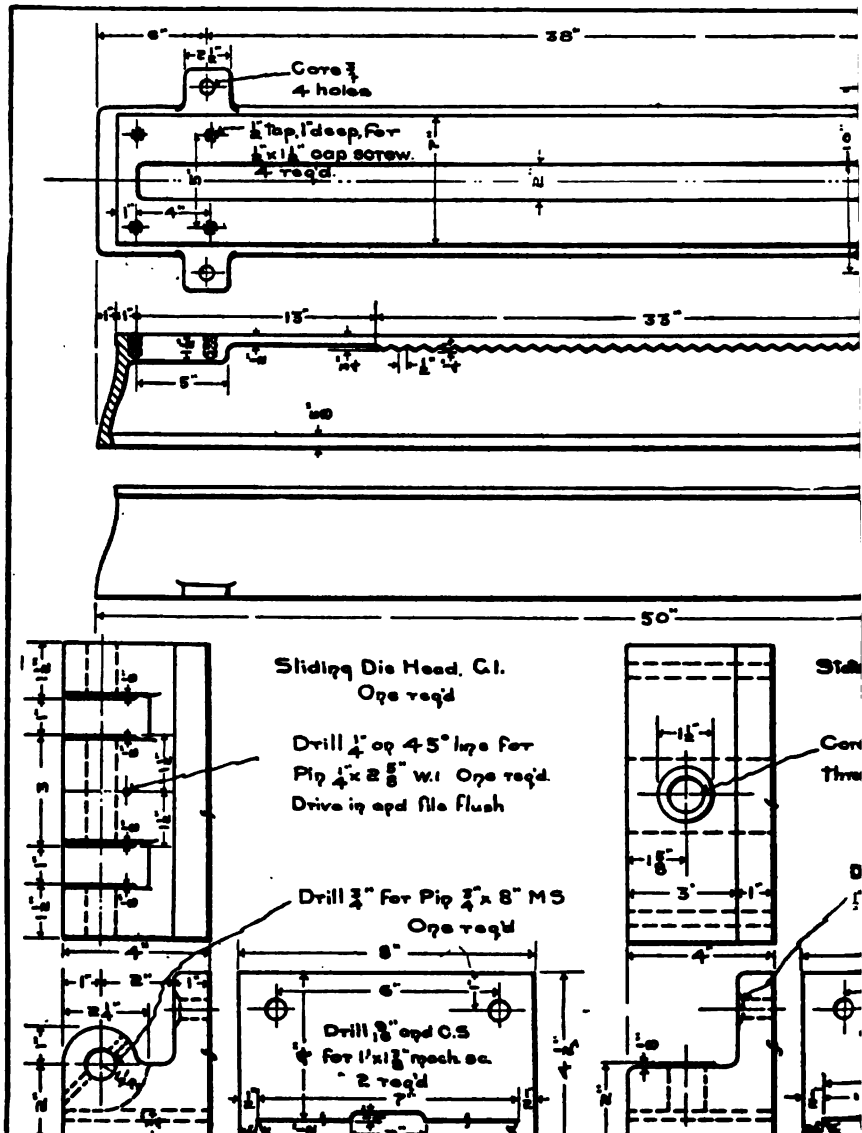

38"
Core 3/4
4 holes
1/2" Tap, 1" deep, for
1/2" x 1 1/2" cap screw.
4 req'd.
13"
33"
5"
50"
Sliding Die Head. C.I.
One req'd
Drill 1/4" on 45° line for
Pin 1/4" x 2 5/8" W.I One req'd.
Drive in and file flush
Drill 3/4" for Pin 3/4" x 8" MS
One req'd
Drill 9/16" and C.S
for 1" x 1 3/8" mach. sc.
2 req'd

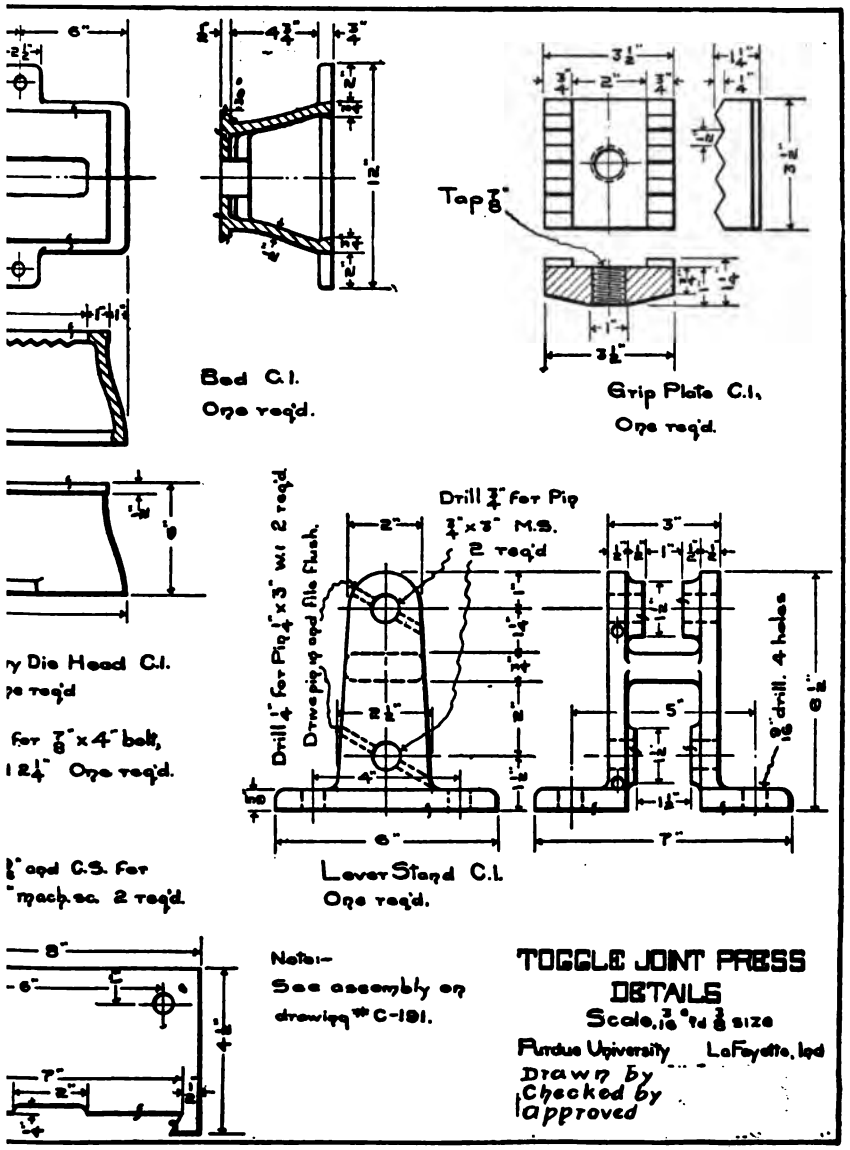
Bed C.I.
One req'd.
Grip Plate C.I.
One req'd.
Tap 7/8"
Drill 3/4" for Pin
3/4" x 3" M.S.
2 req'd
Drill 1/4" for Pin 1/4" x 3" w.i. 2 req'd
Drive pin in and file flush.
9/16" drill. 4 holes
Lever Stand C.I.
One req'd.
Note:-
See assembly on drawing # C-191.
TOGGLE JOINT PRESS
DETAILS
Scale, 3/16" to 3/8" size
Purdue University LaFayette, Ind
Drawn by
Checked by
Approved

Design No. 1

Toggle-joint Press

126. Analysis of the Forces Involved.—Referring to Plate C-1, it will be seen that the acting forces can be represented in the following force diagram, with the direction of the forces represented by arrows.

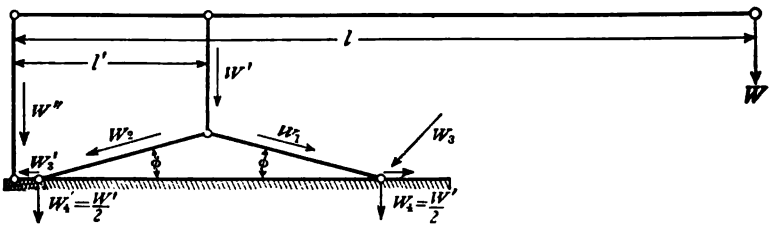

Fig. 102.

Each designer will be given a value for W, l, l' and ϕ. In all the designs ϕ may be taken at 10°, assuming that the maximum load will be carried at this position and that the lever arm will then be horizontal.

In the assignments for a number of designs the range of values may be as follows:

$W=200, 300, 400$	1000 lb.
$l=4, 4.5, 5, 5.5$	10 ft.
$l'=$for large sizes, 6, 8, 10	12 in.
for small sizes 6, 6.5, 7	8 in.

Selecting for our analysis the following values: $W=100$ lb.; $l=5$ ft. 3 in.; $l'=7$ in.; and $\phi=10$ degrees, we have from the force diagram

$$W' = \frac{Wl}{l'} = \frac{100\times 63}{7} = 900 \text{ lb.}$$

$$W'' = \frac{W(l-l')}{l'} = \frac{100\times 56}{7} = 800 \text{ lb.}$$

$$W_1 = W_2 = \frac{W'}{2 \sin. \phi} = \frac{900}{.3473} = 2591.4 \text{ lb.}$$

$$W_3 = W_1 \cos \phi = 2591.4\times .98481 = 2552 \text{ lb.}$$

$$W_4 = \frac{900}{2} = 450 \text{ lb.}$$

127. Lever.—The formula for calculating beams in flexure, Art. 4, is $M = SZ$, where $M =$ bending moment in pounds-inches, $S =$ working fiber stress in pounds and $Z =$ resistance of the section or modulus. In any section of the lever transversely across the axis let b and h be the breadth and the height of the section respectively. The designer must here decide if the beam is to have parallel sides, in which case b will be constant for all sections, or taper sides, in which case a certain ratio of b to h would be used. The best way to decide which to use is to find the size of the sections at two critical points as g and c, Fig. 103 (c is the fulcrum and g is any point near the handle), for each case and select between them. Assuming $S = 8000$ for

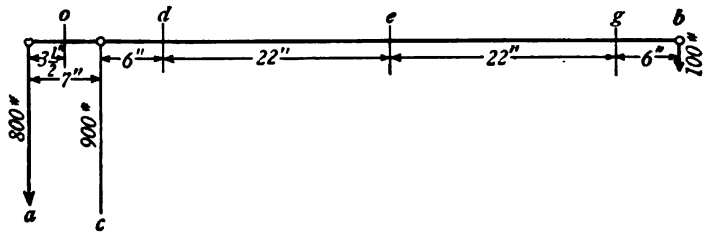

FIG. 103.

wrought iron or mild steel, $b = 1$, and disregarding the hole at c, which has little effect since the fiber stress of any section approaches zero at the center, our formula $M = SZ$ gives

(section at g) $100 \times 6 = 8000 \times 1 \times h^2 \div 6$; $h = .67$ in.

(section at c) $100 \times 56 = 8000 \times 1 \times h^2 \div 6$; $h = 2.05$ in.

This beam would have a better shape and would also be lighter if the thickness be reduced below 1 in., say to .75 in. With this value the formula gives

(At g) $100 \times 6 = 8000 \times .75 \times h^2 \div 6$; $h = .77$ in.

(At c) $100 \times 56 = 8000 \times .75 \times h^2 \div 6$; $h = 2.37$ in.

These values give a well-shaped beam, having a section .75 in. $\times$ .77 in. at g and .75 in. $\times$ 2.37 in. at c.

On the other hand, suppose a ratio of b to $h = \frac{1}{4}$, to be desired, the problem becomes

(At g) $100 \times 6 = 8000\ h^3 \div 24$; $h = 1.22$ in.

and $b = 1.22 \div 4 = .3$ in.

(At c) $100 \times 56 = 8000\ h^3 \div 24$; $h = 2.56$ in.
and $b = 2.56 \div 4 = .64$ in.
section at $g =$ .3 in. $\times$ 1.22 in.
section at $c = .64$ in. $\times$ 2.56 in.

The above gives the method of determining the size of the section at any point of the beam. Sections should be taken at regular intervals of length and a diagram plotted from the results. One section only need be taken between a and c, say at o midway between. This diagram when completed will show the beam to take the form of a curve similar to Fig. 104. It may be found convenient, however, to approximate this curve with a straight line as $x\ y$. This would be satisfactory for strength and would be more easily constructed.

It will be noticed that the bending moment becomes zero at the points a and p where the loads are applied. This would theoretically give no size to the handles and make it impossible of

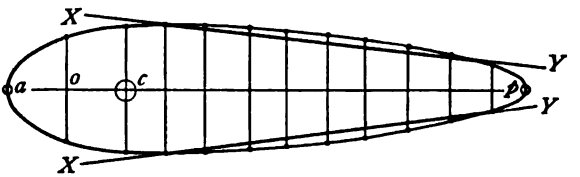

FIG. 104.

construction. Some satisfactory design of handle or hub must be made at these points with sufficient size to carry the pins or bolts, each hub to have the sides and edges of the beam filleted into it in a neat manner. See Plate C-3. A handle can be placed at p for all loads of 300 lb. or less and a drilled hub for larger loads so that a small air or steam cylinder can be attached. A similar hub will be added at a, for connection to the post at the rear.

128.—The following shapes may be found useful in designing the lever.

Shapes at p.—The size and shape of the handle or hub at this end will be largely a question of neatness, since the load carried is very small. The pin, if one is used, may be calculated for

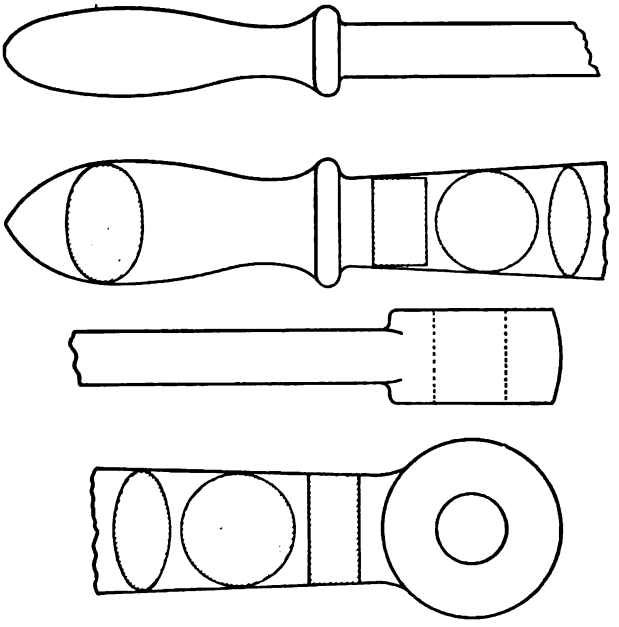

Fig. 105.

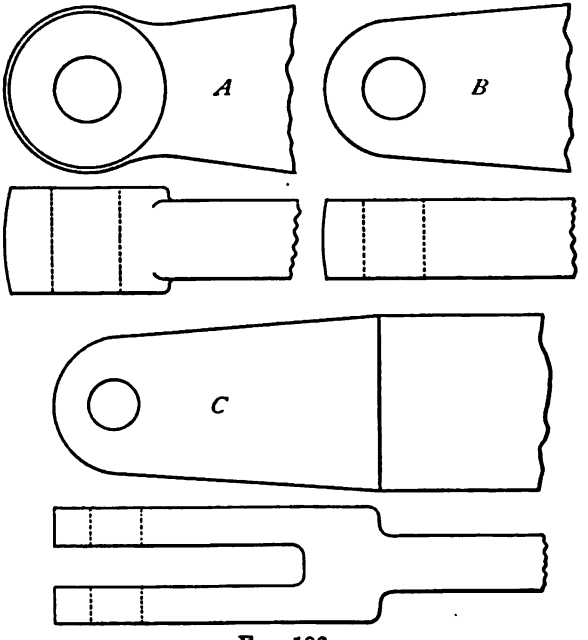

Fig. 106.

double shear to get the minimum size allowable, but this size will probably be so small that it will be necessary to increase the size of both pin and hub to add symmetry to the design. Such points as this call for special investigation. Any piece of a machine may be made extra strong, if necessary to harmonize with the other parts of the machine, but the reverse is not the case.

Construction of the Joint at a.—Referring to Fig. 106, shapes A and B would be preferred. In most cases the standard would be made of cast iron and could easily be cored out to fit over the lever arm end rather than to fit the arm end over the standard as at C. The only calculations necessary for this end of the lever, besides figuring the pin, are those that determine the diameter of the hub and the length of the hub. It is reasonable to assume that the *diameter* of this hub should be made equal to the diameter of the cast hub of the standard. To illustrate: at a, a tensional force of W'' is acting upward and this force is resisted by four cast iron areas on the section, RS, equal in total area to $R'S'$, of the standard (Fig. 107).

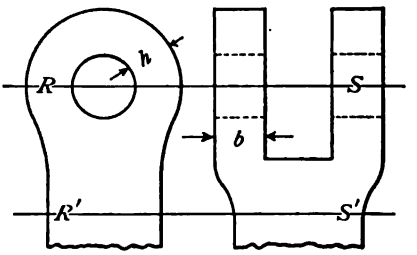

FIG. 107.

These four areas are produced by passing a plane through the standard along the line RS. Each area is equal to bh and should be figured for cast iron in direct tension by the formula $W = SA$. In making this calculation the ratio of b to h may be assumed. Having figured the pin for double shear by the formula $W'' = 2SA$. find the diameter of the pin and add to it $2h$, which will give the diameter of the cast hub and consequently the diameter of the lever end. If S for shear in wrought iron be taken at 5000 lb. per square inch, the diameter of the pin will be .33 in. or, say $\frac{3}{8}$ in. If S for tension in cast iron be taken at 1500 lb. per square inch, the area bh will be .133 square inch, from which, if b be taken at $\frac{1}{4}$ in., h becomes .53 in. This would make the diameter of the hubs at a, $1\frac{3}{8}$ in.

It will be next in order to find the *length* of the hub at the lever end, also the corresponding values of the standard top. These

are determined largely from the crushing strength of the pin. First examine b of the standard to see if the assumed $\frac{1}{4}$ in. is sufficient. The part of the pin in the casting and the part in the lever are both subjected to a crushing force. The resistance of the pin to crushing is in proportion to the projected area of that part of the pin involved.

In Fig. 108 let the pin be cut by a horizontal plane through its diameter 1, 6, 7, 4, corresponding to the plane along RS of the standard. 1, 2, 3, 4 and 5, 6, 7, 8 are the projections of the parts

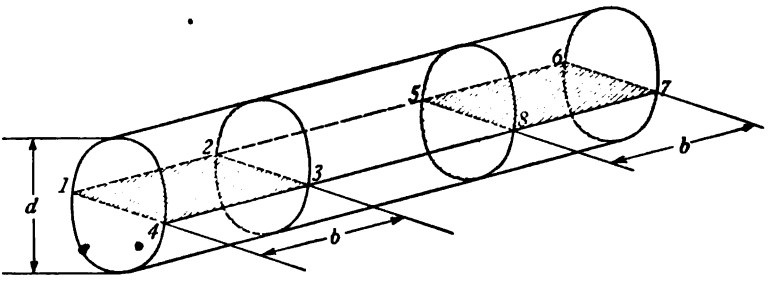

FIG. 108.

included within the arms of the standard and 2, 5, 8, 3 is the projection of that part included within the lever end. The diameter of the pin has previously been figured to resist shearing along the two planes 2, 3 and 5, 8. Now it is necessary to find the length 1, 2 and 5, 6 such that these parts will be safe from crushing. For the part in the casting, $2bd = 2 \times \frac{1}{4} \times \frac{3}{8} = \frac{3}{16}$ sq. in. = areas 1, 2, 3, 4 + 5, 6, 7, 8. If now the factor of safety for the wroughtiron pin be taken so that 5000 is a safe value for shear, S_s, the pin will sustain $W = S_s A = \frac{3}{16} \times 5000 = 938$ lb. safely. This we find is greater than the load W'' actually pulling on the standard so that part of the pin within the castiron standard is safe. If it had been found that $2bd$ was so small that the load it was capable of sustaining safely before crushing was less than the load applied, then either b or d or both would be increased. If d were increased without changing b then the hub diameter would be increased this amount above the calculated size of $1\frac{3}{8}$ in., but if b were increased, the areas bh would be stronger than the calculated value and h could be reduced accordingly, if it were considered necessary.

By the same line of reasoning the length of the pin within the lever would determine the mimimum length of the lever hub to resist crushing. This would be $2b = \frac{1}{2}$ in. From inspection it is readily seen that the thickness at a must be necessarily increased to that of the lever section. This at c is .64 in.

In every fastening of this kind, investigation may be made for shearing of the pin, the strength of the sections around the pin, and the crushing of the pin, within both lever and standard.

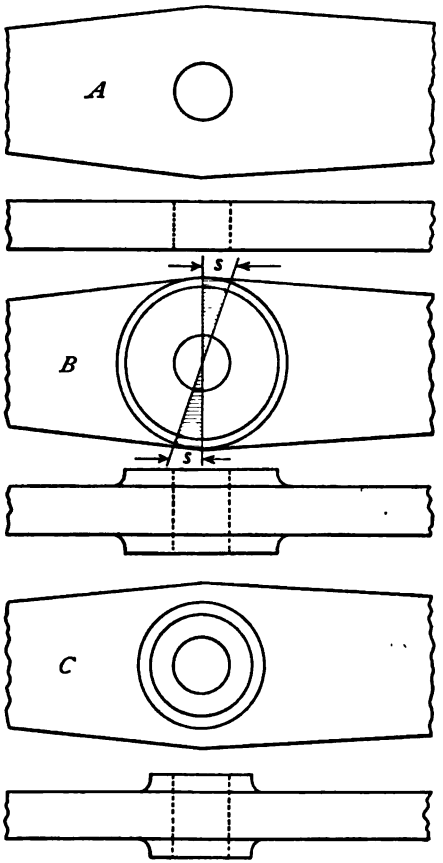

FIG. 109.

129.—In calculating the size of the section at c the hole was not considered. The error introduced by this is very slight and in most cases may be neglected. The fiber stress in the cross-section of the arm varies from zero near the center to a maximum at the edge as shown in diagram B, Fig. 109, where by proportion we can readily obtain the relative resistance offered by the metal at the center as compared to that at the edge of the section. The loss at the center is more than taken up by the addition of a fraction of an inch at the edge or a very small boss around the hole. If the hole in any case should be large, a modulus could be selected for this hollow section, and the exact sizes obtained.

The pin would be calculated in double shear—as at a.

The size of the boss, if any be added, is largely optional and is put on for finish.

130. Screw Fastening for Standard.—In deciding upon the kind of fastening between the standard and the bed, it would be well to first examine it regarding the turning moments about a, Fig. 110, where $W''b + W_3h_3 - W'_4b' = W_xl' + W_yl''$. Assume $b = b' = 3$ in., $h_3 = 2$ in., $l' = 5$ in. and $l'' = 1$ in. then with $W'' = 800$, $W_3 = 2552$, and $W'_4 = 450$ lb. We have $5\ W_x + W_y = 6154$ inch-pounds.

If $W_x = W_y$ then $6\ W_x = 6154$ or $W_x = 1026$ lb. This is equivalent to a ½-in. bolt. Suppose W_y, because of its location, to be of little value in resisting turning about a, then $5\ W_x = 6154$ and $W_x = 1231$ lb. = approximately $\frac{9}{16}$-in. bolt. If more than one bolt is used along the line W_x or W_y then the total bolt area at the root of the threads may be the equivalent of that given above.

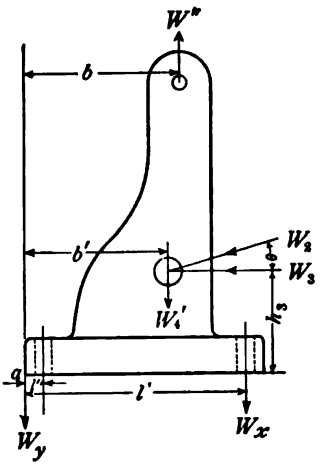

Fig. 110.

Next examine the joint for a summation of all vertical forces.

$W'' - W'_4$ = force holding standard to bed $= W_x + W_y$. If $W_x = W_y$ then, $2\ W_x = 800 - 450 = 350$ lb. and $W_x = 175$ lb.

Since this force is less than that obtained by moments it need not be considered.

Next examine the joint for a summation of the horizontal forces. In this the force W_3 tends to shear the bolts off in a plane with the top of the bed. It also acts upon the flanges to shear the casting inside the bolt holes. Considering the bolts first

$$W_3 = SA. \quad \text{If we take } S = 5000, \text{ then}$$
$$2552 = 5000A;\ A = .51 \text{ sq. in. of bolt area.}$$

If the bolt shears at the root of the thread, as would be the case with a cap screw, we need at least four ½-in. cap screws.

In the second case, if the flange is, say 6 in. long and t in. thick, we have for the two sides $2552 = 2 \times 6\ tS$. Let $S = 1500$ for cast iron and find $t =$ approximately .15 in.

This would, of course, be made thicker, say $\frac{1}{2}$ to $\frac{3}{4}$ in., for the appearance and good proportion of the casting.

In the above discussion of the standard fastening, the part most liable to fail would be the shearing of the bolts. This might not be true in every case; for example, if h_3 were very great when compared to l', the failure of the joint would probably be by moments about a. The above calculations would be modified, also by the arrangement of the bolts or cap screws.

It is well in every case to examine a joint from all standpoints and design for the greatest requirement.

131. Standard.—The design of the standard would depend largely upon the magnitude of the force to be resisted. In the smaller machines it would undoubtedly be made of cast iron and

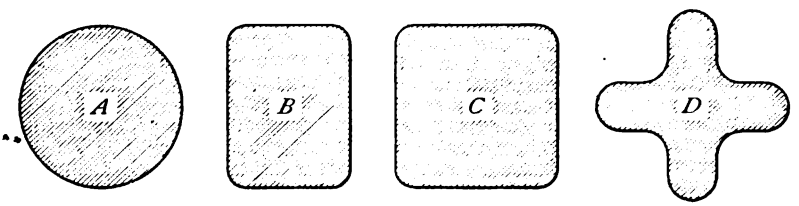

FIG. 111.

as such the upper end would be as shown in the preceding paragraph. In the larger machines the standard would be made of wrought iron or steel plates, in which case the sizes of the standard and lever end would be calculated from different values of S than those used for cast iron.

The cross-section of the body of a cast iron standard may be shaped as in Fig. 111. Assuming the areas to be equal, the strongest section to resist any bending action that may come upon it, is D.

The lower end of the standard would be planned to receive the rod W_2, and would have a flange for fastening to the top of the bed. Fig. 112 shows some of the shapes that may be used.

The pin at the base is figured for double shear by the formula $W_2 = 2\ SA$.

NOTE.—When the constant 2 is used in the formula for double shear the result is the single cross-section of the piece. When this constant is omitted as in $W = SA$ the result is the combined cross-sectional area.

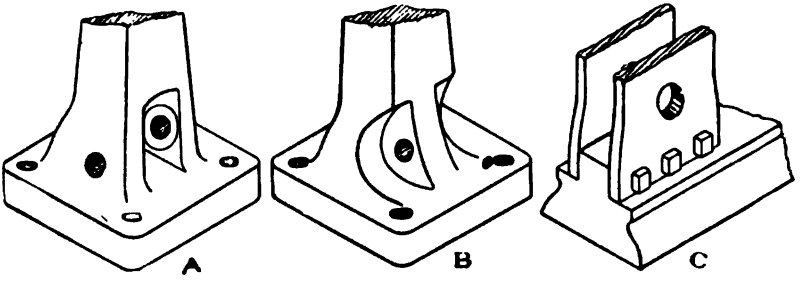

FIG. 112.

132. Toggle.—There are three ways in which the toggle may fail at the central joint: by shearing the pin, by bending the pin and by crushing the pin. In Fig. 113, B shows a very simple arrangement of this point. To obtain the size of the pin in this case to resist shearing

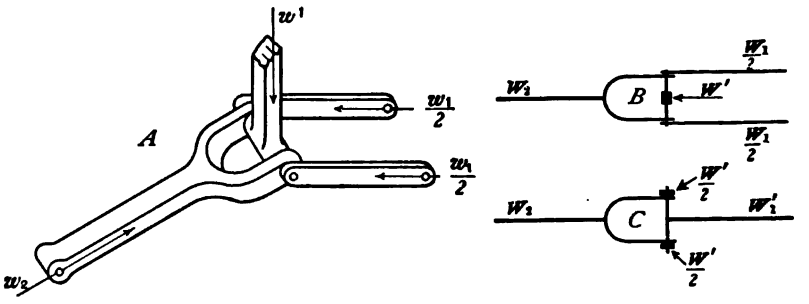

FIG. 113.

$$W_1 = W_2 = 2SA. \quad \text{If } S = 5000, \text{ then}$$

$$2591.4 = 2 \times 5000A.; \; A = .26 \text{ sq. in. and } d = .58 \text{ say } \tfrac{5}{8} \text{ in.}$$

It is readily seen that the pin would be found to be the same size if the load $\frac{W_1}{2}$ were figured for single shear as if W_1 were figured for double shear.

To obtain the size of the pin to resist bending assume some

length of pin between the outer forces $\frac{W_1}{2}$, as 2 in. or 3 in., and solve by the formula $W'l \div 8 = SZ$. See Art. 4. There might be a question raised here concerning the proper formula to use for the bending moment, *i.e.*, fixed ends or free ends. With the two ends of the pin held somewhat rigidly between the two sets of resisting forces, it is in about the same condition as a beam

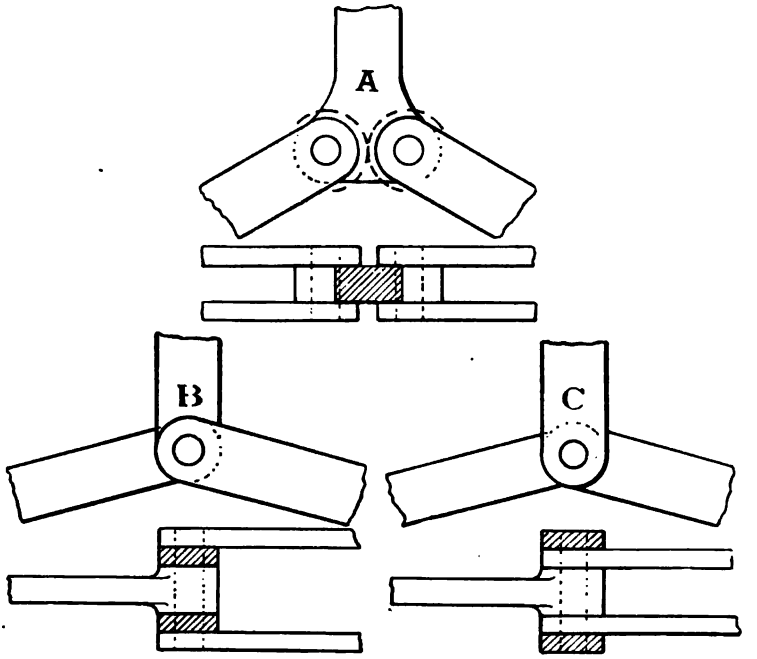

FIG. 114.

fixed at the ends and loaded at the middle. If $S = 8000$ and $l = 2$, then $900 \times 2 \div 8 = 8000 \times \pi d^3 \div 32$; $d = .65$ say $\frac{11}{16}$ in.

The toggle action on the pin at the center requires that the smaller force W' should come at the center of the length of the pin as shown in *A* and *B*, Fig. 113. If the heavier force W_1 or W_2 acts at the center of the pin it would cause an unnecessary bending as shown in *C*, and would require too large a pin to resist this stress.

Fig. 114 shows other methods of designing the toggle.

Concerning the crushing of the pin see Art. 128.

133. Fig. 115 gives some shapes of toggle members. *A*, *B*, *C*, and *D* are usual shapes of the horizontal members. *A* and *B* have split ends and are necessarily hard to forge and machine. *C* is the simplest form. This form is sometimes modified by adding bosses to one or both sides as shown in *D*. The vertical member may be constructed solid as at *E* or adjustable as at *F*.

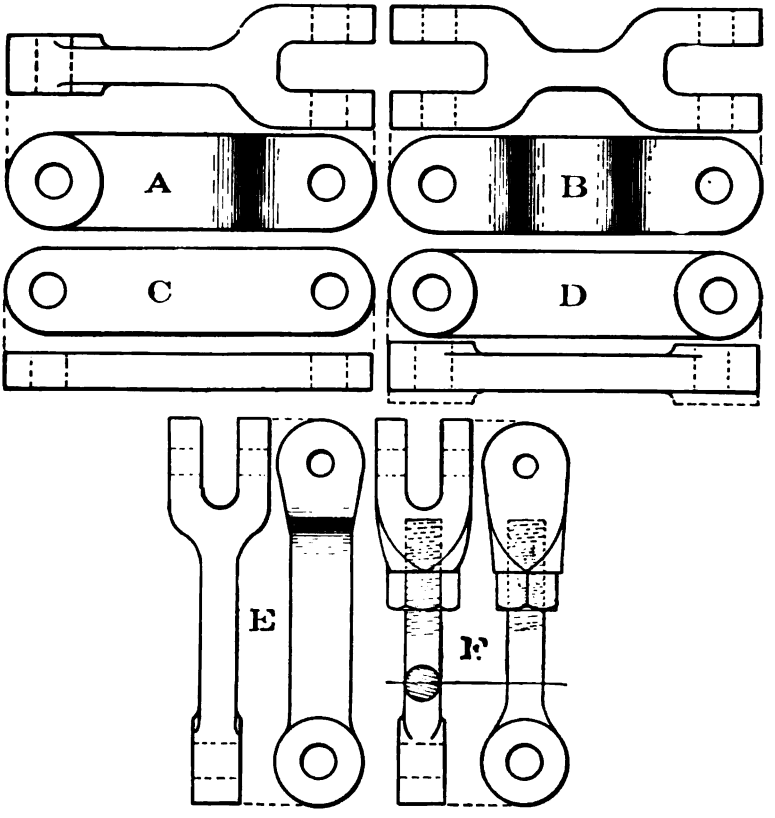

FIG. 115.

134. Die Heads.—The sliding head receives the thrust W_1 from the toggle and moves along the top of the bed toward or from the stationary head. It must be a good fit to the bed top having a free sliding contact but no side motion. The stationary head must be planned for longitudinal adjustment and for fasten-

ing rigidly to the bed top when desired. Suggestions for attaching these heads are shown in Fig. 116. Rectangular and V-shaped ways are used, some having adjusting gibs and some plain. *A* is the simplest form and may be grooved from the solid or held down by plates. In such a design the overlap below the top of the bed should be made sufficiently strong to resist the turning action from W_3. *B* and *C* show the application of gibs between the sliding head and the bed to take up side slack. In some classes of machines gib arrangements are essential. If,

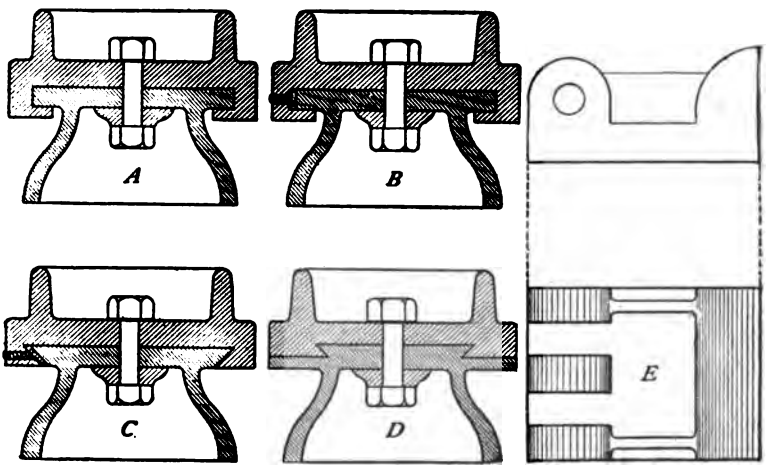

FIG. 116.

however, heavy side thrusts are involved the form *C* is questionable unless made very heavy and strong. With the bed planed to an angle as at *C* and *D*, the latter would be considered the stronger.

Sliding Head.—Since the sliding head cannot be rigidly fastened to the bed, it must be fitted to a set of guides. The most common fastening is shown in Fig. 117. Having the forces W_3 and W_4 (resultant forces from W_1) acting on the pin and allowing all the reaction from the die to fall at the upper point of the head, say 4 in. above the bed, we have a cantilever beam projecting upward from the bed top and acted upon by three forces tending to break the beam at some section as *ao*. Any leverages may be

selected other than 4 and 2 but these are given for the sake of argument, the actual values used depending largely upon the kind of die used between the two heads. It is evident that the two forces opposing each other (W_3, action and reaction) will have the same value. These moments will cause stresses in any section under investigation. Suppose the line ao to be the weakest section in the beam. The tendency to break here is resisted by two metal sections, each b inches in width and h inches in height, or, by one section $2\,b$ inches by h inches. The fiber stress caused by the moments from the two W_3 forces will cause a maximum tension at o which becomes less as it approaches a. This tensional fiber stress at o will be partially neutralized by a downward force W_4 distributed more or less uniformly over the area $2\,bh$; the final stress at o being the algebraic sum of the two. Let $S_p =$ pressure per square inch acting perpendicularly

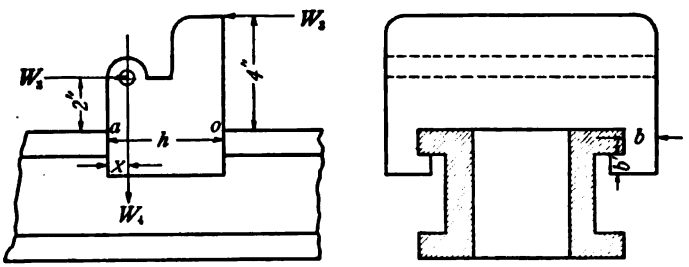

FIG. 117.

to the bed top over section $2\,bh$, $S_m =$ tensional fiber stress at o due to the moments and $S_t =$ resulting fiber stress at o.

Taking W_3 in two moments about ao and W_4 in direct pressure we have $W_4 = S_p\,A$ and $M = S_m\,Z$, from which we obtain $S_p = \frac{450}{2\,b\,h}$ due to direct pressure and $S_m = \frac{2552 \times 2 \times 6}{2bh^2} = \frac{15312}{b\,h^2}$ due to the summation of the moments. Now if $S_m - S_p = S_t$; also if $h = 5$ in. and $S_t = 1500$ we have $b =$ approx. $\frac{3}{8}$ in.

If the fiber strength of tension and shear in cast iron be taken the same, then $b' = b$ approximately.

In like manner the reaction W_3 from the die may be taken at the bottom instead of the top of the sliding head, and the turning moment figured in this way to see if there is greater danger to the section than when taken at the top.

Other investigations may be made for this fastening. If the projection b' were fastened on with screws the calculations would be worked up in a similar way to the fastening at the base of the standard.

Stationary Head.—As in the sliding head, it is assumed that the stationary head is properly designed above the bed top and that the fastening only is in question. Fastenings for small machines will not be difficult but those for large machines will call for extreme care. The simplest fastening is shown in Fig. 118 and acts as a frictional resistance only. If W_t = tension on the bolt in pounds, $W_3 = 2552$ lb., $y = 4$ in., and $x = 6$ in., we have by moments, disregarding the benefit obtained from the overlap of the block around the frame, $2552 \times 4 = 6W_t$, or, $W_t = 1702$ lb. This will hold the block to the bed. It is now necessary to determine if the block will slip with this force binding the frame between these

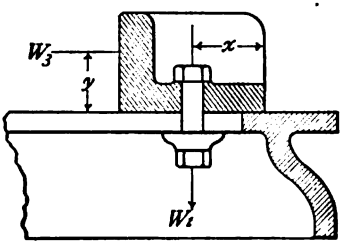

FIG. 118.

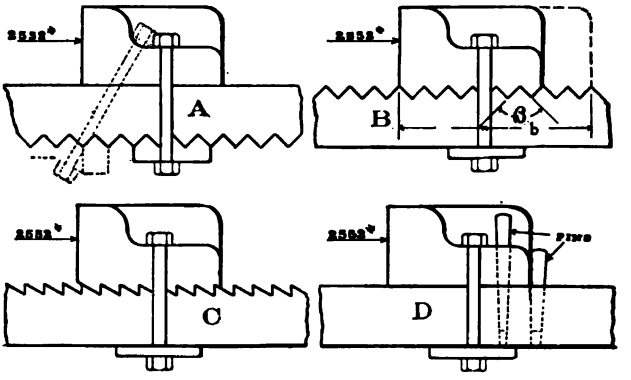

FIG. 119.

two friction surfaces. Let the coefficient of friction between the block and the frame also between the washer and the frame be $\phi =$ say .3, then the resistance due to friction is, by formula, $2\phi W_t = F$ and when applied to our problem is 1021.2 lb. That is, with the conditions as stated, if W_3 were

only 40 per cent as large as it now is the block would just slip. Since the bolt as figured from moments proves to be too small to keep the block from slipping, let us reverse the process and find how large a bolt will be necessary to hold the block against the force W_3. By substituting as above we have $2 \times .3 \times W_t = 2552$, from which $W_t = 4253.5$ lb. This force is being exerted at the root of the thread tending to elongate the bolt. With $S = 8000$, this will give slightly greater area than .5 sq. in. and will require a bolt of approximately 1 in. diameter. It is evident from this that more than one bolt should be used, or that some other arrangement be substituted for the friction surfaces. In Fig. 119, A is very similar to Fig. 118, excepting that the lower surface is notched to protect it from slipping. The upper block may slip slightly, but this will cause a greater grip and a consequent increase of frictional resistance. A possible improvement on this, if the construction of the machine would permit it, would be to have the bolt at an angle as shown in the dotted lines.

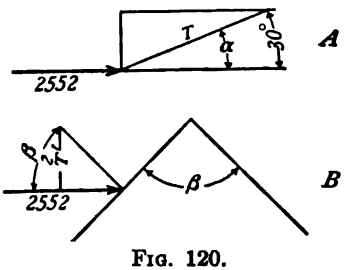

FIG. 120.

Let this angle be, say 30 degrees with the horizontal, then from Fig. 120, A, $.3T \sin a$ = resistance due to friction, and $T \cos a$ = horizontal component of the bolt tension. Combining we have, $.866T + .3 \times .5T = 2552$, or,

$$T = 2512 \text{ lb.}$$

This will require a $1\frac{3}{8}$-in. bolt.

Fig. 120, B, will cause a tension on the bolt (disregarding friction) of $T' = 2552 \tan (\beta \div 2)$. Let $\beta = 90$ degrees then $T' = 2552$ lb., requiring a $1\frac{3}{8}$-in. bolt. It is very evident that if friction were included in this it would reduce the bolt size somewhat.

Let the student investigate this with friction included.

C, Fig. 119 is probably not as strong in the shape of the tooth as A and B, but with a large tooth area the unit shear becomes small enough so that the teeth are not endangered. The vertical faces on the teeth reduce the vertical thrust on the bolt to a

minimum and permit the use of a bolt just sufficiently strong to protect the block from turning as in Fig. 118.

D is arranged to have pins to fasten into the frame either through the block, or behind it. These pins keep the block from sliding and are calculated for shear, while the bolt is calculated to resist turning as in Fig. 118.

Another way in which these fastenings may fail is by shearing the bolt. Assume W_3 Fig. 118 entirely acting to shear, we have $\frac{2552}{S = \text{say } 5000} = .51$ sq. in. of bolt area. If this is taken as the full area of the bolt it would be $\frac{13}{16}$-in. diameter. This shows a requirement about equal to that for tension. In any form of fastening it is well to investigate both tension and shear and take the larger requirement.

It should be understood that, if the block clamps over the edges of the frame on planed ways, this will assist the bolt in holding the block down and a smaller bolt may be used.

Let the student investigate this as in the case of the sliding head.

135. Frame or Bed.—The calculations for the frame will be found somewhat more complicated. Assume a simple type, say

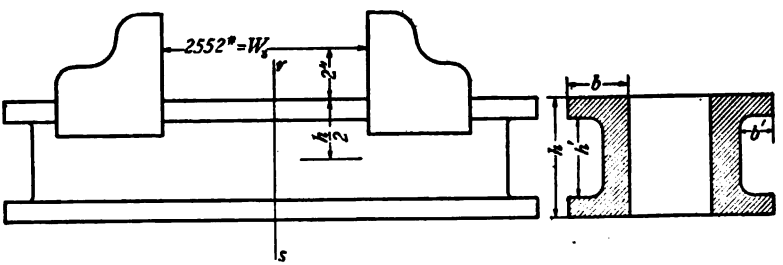

FIG. 121.

of the same general shape and cross-section as Fig. 121. Assume also the force W_3 acting at some point along the block face, say at the middle of the block, a distance of 2 in. above the top of the frame. Any other height may be taken but in all probability if the dies should not be parallel and they should strike hard at the top, this inequality would be accounted for by a slight

springing of the bed. It may be assumed that the force W_3 will act somewhere near the center of the die before it reaches such a magnitude as to endanger the frame. This force tends to break the bed along some line as rs, and produces combined tensional and compressional stresses in the fibers of the section. Considering the part to the right of the section as free we have, Fig. 122, the fibers on the upper or weak side subjected to two tensional stresses, the sum of which should not exceed the safe fiber stress of the metal, *i.e.*, $S_1+S_2=S_t$; and the fibers on the lower side, subjected to a tensional and a compressional stress, the algebraic sum of which should not exceed the safe compressional fiber stress of the metal, *i.e.*, $S_1+(-S_2)=S_c$ where

S_1 = uniform tensional stress

S_2 = stress due to bending

S_t and S_c = combined stresses.

To obtain S_1 and S_2 on the tension side use the formulas $W_3=S_1A$ and $M=S_2Z$ and obtain

$\frac{W_3}{A}=S_1$ where A = area of section in square inches and

$\frac{W_3(h+2+2)}{Z}=S_2$ where Z = modulus of section. It will be seen that the moment arm is the perpendicular distance between the force and the center of the section. The value $\frac{h}{2}$ would be changed for any other than a uniform section. See Art. 144.

Having selected the section of the bed as Fig. 121, we find the modulus to be

$$Z=\frac{b\,h^3-b'\,h'^3}{6\,h}\times 2 \qquad \text{See Art. 4.}$$

It will be necessary here to select some values for b, b', h and h' and make a trial solution. Take $b=2$ in.; $b'=1\frac{1}{2}$ in.; $h=6$ in. and $h'=4$ in. With these values we find $A=12$ sq. in. and

$$S_1=\frac{2552}{12}=212.7 \text{ lb. per square inch}$$

also $Z=18.8$ and

$$S_2=\frac{2552\,(3+2)}{18.8}=679 \text{ lb. per square inch.}$$

$$S_t=S_1+S_2=679+212.7=891.7 \text{ lb. per square inch.}$$

Since the usual value of S_t for cast iron is 1500 to 2000, this shape and size of section would be stronger than necessary.

Now, if the figures of the section be changed to read $b=2$ in.; $b'=1\frac{1}{2}$in.; $h=5$ in.; and $h'=4$ in. the value becomes

$$S_1=\frac{2552}{8}=319 \text{ lb. per square inch, and } S_2=\frac{2552\ (2\frac{1}{2}+2)}{10.2}$$

$=1126$ lb. per square inch.

$$S_1+S_2=S_t=319+1126=1445 \text{ lb. per square inch.}$$

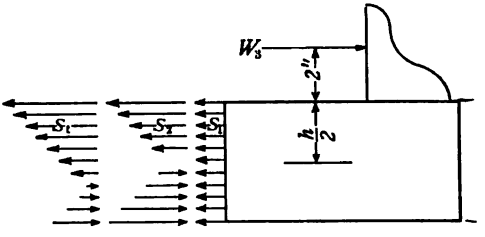

FIG. 122.

This seems to agree very well with the safe value of cast iron in tension, and may be used. Since this is a symmetrical section and since cast iron is much weaker in tension than in compression, the latter will not need to be investigated and the above figures can be accepted for the sizes of the bed. With a section that is unsymmetrical it would be necessary to investigate both sides of the section. See Art. 144.

Having found the shape of the simple section it is possible to modify it to a certain degree without affecting the calculations seriously. To illustrate, the portion *abcd*, Fig. 123, may be lopped off and added to the inner side at *a'b'c'd'* without affecting the modulus. Metal may be moved paralled to the axis of the section so long as the section is not distorted to such an extent that it will break by twisting. Any change of metal, however, toward or from the axis of the section, changes the modulus and hence the resisting power of the section.

Fillets may be added at the interior corners giving a shape similar to most frame tops.

For the bottom, a slight deflection or slope of the web, as shown by the dotted lines, gives a result very similar to a plain cast iron

engine or lathe bed. Other minor changes such as slight curves instead of straight sides might be made without any loss of rigidity. In any case where the shape of the simple section is found and the designer wishes to increase the thickness of any part he may do so and the result is merely to increase the factor of safety.

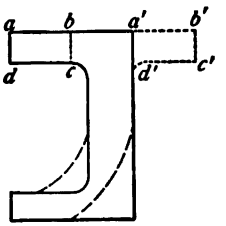

FIG. 123.

Suppose some other than a uniform section is desired, the same process would be employed in finding the stresses as given above. The modulus, Z, however, would be obtained as shown in Art. 144.

If under very heavy loads it is advisable to specify one or more steel I beams or channels from Cambria, this may be done by making a trial selection of a section and substituting the value of Z and A in the formulas as before. If this value $S_1+S_2=S_t=8000$ to 16,000, the exact value depending upon the rigidity of the beam, the condition is fulfilled as in the case of the cast frame.

136.—The final determination in this design is to obtain the length of the frame to prevent overturning when the load is

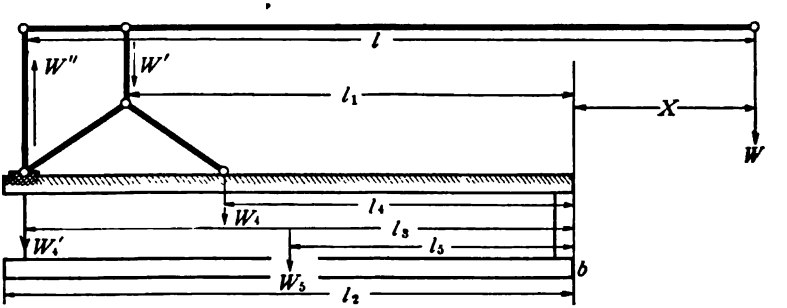

FIG. 124.

applied. Let W_5 Fig. 124 = the weight of the frame, then from the force diagram we have the following moments about the end at b

$$Wx+W''l_3-(W'_4l_3+W_4l_4)-W_5l_5=0$$

but $W'_4l_3+W_4l_4=W''l_3$ and $Wx=W_5l_5$.

The length may then be obtained by adjusting the values of x and l_5 such that the equation will be satisfied.

To obtain the length, however, in a more direct way the following can be used:

If $x = l - l_3$ and $l_5 = l_2 \div 2$ then $W(l - l_3) = W_5 l_2 \div 2$.

Knowing the cross-section of the bed in square inches, the weight of 1 in. in length would be $.26A$; the total weight of the bed being $.26 l_2 A$ approximately.[1] Then $l_2^2 = W(l - l_3) \div .13A$.

Let $l_3 = l_2 - a$ where a is the offset as shown, then $l_2^2 = W(l - l_2 + a) \div .13A$, from which we obtain the formula

$$l_2 = -3.85\frac{W}{A} \pm \sqrt{7.7\ (l+a)\frac{W}{A} + 14.82\left(\frac{W}{A}\right)^2}$$

[1]The weight of the frame W_5 would be greater than here shown because of the metal in the ends of the frame and the attached mechanisms, all of which would be effective. The error, whatever it may be, is toward that of safety.

First Alternate, Design No. 1

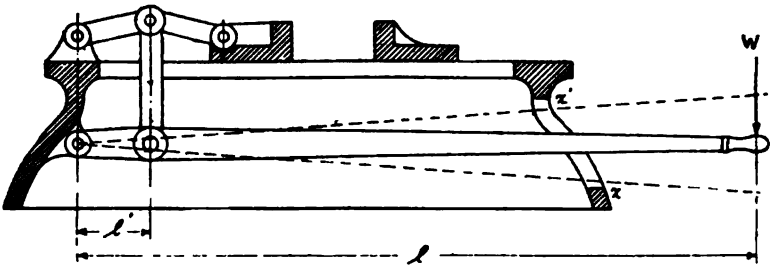

FIG. 125, A

THE TOGGLE JOINT PRESS

137. Assignment.—

$W = \ldots$; $l = \ldots$; $l' = \ldots$; θ (min.) $= \ldots$

In this design the lever is placed within the bed rather than above it. It will be noticed that the end of the bed is slotted to allow for a movement of the lever arm between the points x and x'. The weakening of the bed due to this slot need not be considered a serious matter. With a long and shallow bed, however, the movement of the arm will be small and will give a very slight movement to the sliding block. For our purpose this machine may be designed merely to exert a pressure between the two sliding blocks, in which case a very slight movement is all that is necessary and the form shown will be satisfactory.

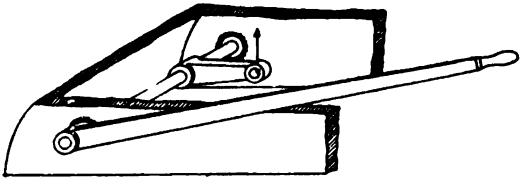

FIG. 125, B.

In case the movement of the sliding block is desired greater than that allowed here, the lever may be arranged as shown in Fig. 125, B.

Second Alternate, Design No. 1

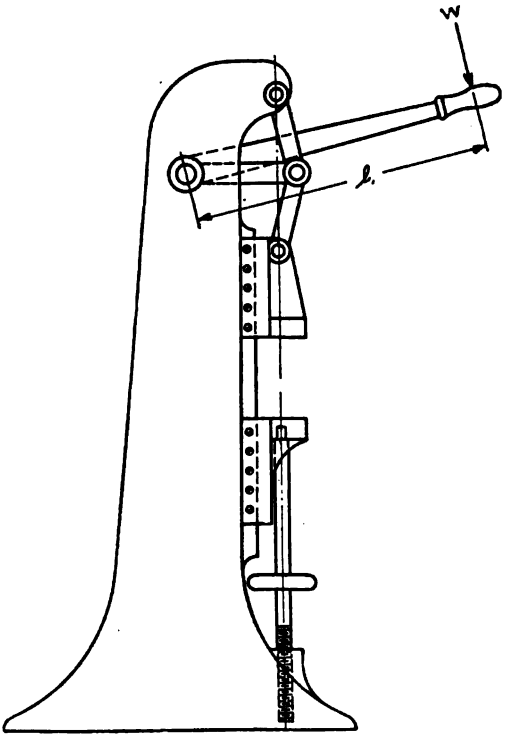

FIG. 126.

VERTICAL HAND-POWER PRESS

138. Assignment. –

$W = ... ; l = ... ; l' = ... ; \theta$ (min.) $= . . .$

This design follows the principles laid down in No. 1, with two exceptions. First, the length l' here becomes so small that a separate crank cannot be used and a bent shaft or an eccentric is substituted. In the eccentric the length l' is the distance between the center of the shaft and the center of the eccentric. Second, the thrust of the sliding block is received through a screw directly against the base of the frame. A hollow rectangular section is suggested as the best shape of the frame. Investigate also for the screw and nut to resist the thrust.

Third Alternate, Design No. 1

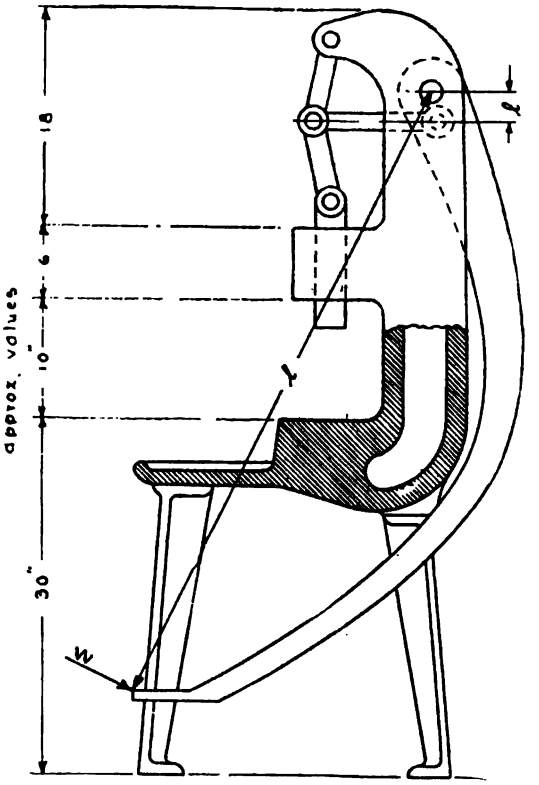

FIG. 127.

THE VERTICAL FOOT-POWER PRESS

139. Assignment.—

W = (100 or less) ..... lb.
l = (60 to 72) ..... in.
l' = (3 to 6) ..... in.
θ (min.) = ... degrees.

This machine can be used for all kinds of light press work where but a small movement of the ram is needed. Where this movement is desired as great as possible, increase l' and decrease l, also reduce the length of the toggle members.

The ram may be made rectangular in section and the forming dies need not be developed. The frame is hollow and the lever l is fastened on the plane of the toggle.

Fourth Alternate, Design No. 1

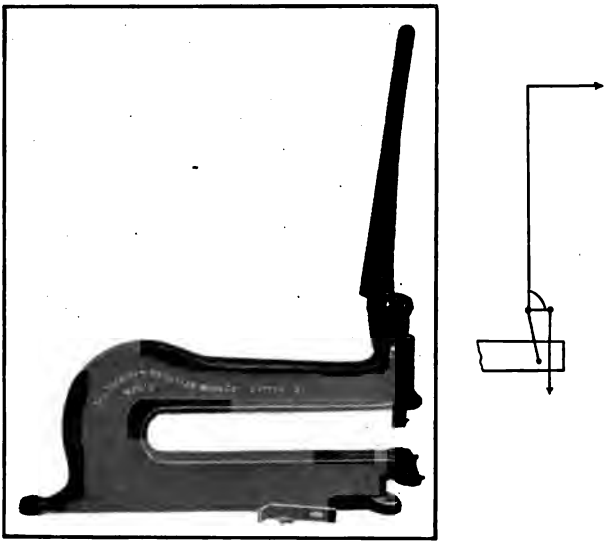

FIG. 128.

SMALL HAND-POWER PUNCH

Fig. 128 shows a small bench tool, used for punching sheet iron and other thin metals. Because of its simplicity only two parts of the assignment will be given. All other necessary assumptions may be made by the designer and a complete set of calculations and drawings made. The diagram to the right shows the mechanism.

140. Assignment.—

W = (at end of lever l, 50 to 100) ..... lb.
T = (length of throat) ..... in.

Fifth Alternate, Design No. 1

FIG. 129.

HAND-POWER PUNCH AND SHEAR

The hand-power punch and shear is strictly a bench tool for operating on light work. The force at the end of the lever arm l should not be greater than 100 lb.; l' is the eccentricity of the cam, a is the distance from the pivot point of the shear arm to the point where the cam force is applied, and b is the distance from the pivot point to the point of greatest shearing resistance.

141. Assignment.—(See Design No. 2 for methods.)

Kind of material to be cut.....
Length of cut or diameter of punch..... in.
Thickness of plate to be cut (up to $\frac{3}{8}$)..... in.
Depth of throat ..... in.

CHAPTER XIV

DESIGN OF BELT-DRIVEN PUNCH OR SHEAR

142. General Statement.—A belt driven punch or shear is the machine selected to represent the second general design. Included within this one machine are problems covering the design of frame, levers, gears, fly-wheel, pulleys, bearings, shafts, sliding head, punch, die, clutch, stripper and cam. The fact that this machine finds such general use in manufacturing plants and that it embodies such a variety of designs makes it an ideal subject for analysis. Fig. 130 shows a motor driven shear of

FIG. 130.

late design. It is not expected that the required design will be for a motor drive, but that the distance between the bearings be shortened and pulleys used instead. In giving out the design the following requirements will be made: first, the work to be accomplished, *i.e.*, diameter and depth of hole to be punched or the cross-section of the piece to be sheared; second, the maximum distance from the edge of the plate to the center of the cutter, *i.e.*, the depth of the throat of the machine; third, the average cutting velocity of the punch or knife in inches per second, or the r.p.m. of the cam shaft.

In the analysis of the methods employed in working up such a design, the frame sections will be carried out somewhat in detail because of the advanced character of the work; the rest of the machine will be dealt with more briefly. In making the assignments, the members of the class should be given values that differ materially from those worked out here. The five sample plates at the end of the design show a complete set of drawings of such a machine.

143. Requirements of the Design.—A machine to punch a 1-in. hole through $\frac{3}{4}$-in. mild steel plate, the center of the hole to be not greater than 7 in. from the edge of the plate. The velocity of the punch during cutting may be taken in this case as approximately 1 in. per second.

144. Frame.—The material used in the frame of such a machine is either close grained cast iron or steel casting. The general shape is about as shown in Fig. 130 and the sections of the frame, Fig. 131, are either hollow cast iron as shown in *B* and *C* or web-shaped steel as shown in *A*. Of the three sections, *B* and *C* are the most common. Fig. 137 represents the outline of the

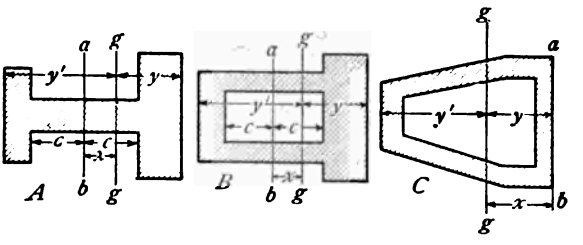

FIG. 131.

assembly drawing as finally worked out about x x, the center line of the frame. To plan the general shape of the frame about the punch, begin by laying off the throat depth, *G*, say 8 in., along the line x x. Find *H* of the same figure by assuming some shape of frame section and calculating the sizes for the various parts of the section as described in this article. Find also other safe sections at various angles to the horizontal and trace the outer curve of the frame through the outer points of these sections,

after which plan the speed mechanism and locate the shafts. It is necessary many times to modify the first layout a great deal but this must be expected and should not cause discouragement.

To work out the sizes of the horizontal section along $x\,x$, select the shape, say B, Fig. 131, from the standard forms and apply the method used in Art. 135, taking G as the depth of the throat and y as the distance from the edge of the casting to the center of gravity of the section.

In applying the formula $S_2 = \frac{W(y+G)}{Z_{(t \text{ or } c)}}$ exercise care in obtaining a satisfactory value for Z in the unsysmmetrical section. To get Z it will be necessary to determine the *moment of inertia* I of the section and then find Z by the following:

$$\text{for tension } Z_t = \frac{I}{y} \qquad \text{for compression } Z_c = \frac{I}{y'}$$

Make a trial selection of some sizes for the section and find the gravity axis by cutting out a pasteboard section and balancing it upon knife edges; or a better way is by the following: *assume*

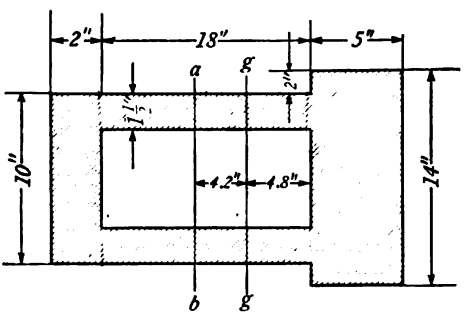

FIG. 132.

any line of reference as ab, take the algebraic sum of the moments of each rectangular section about this line of reference and divide by the total area; this will give the distance x between the line of reference and the gravity axis gg of the section. ab may be taken at any position in the section but the work will be much simplified if it is taken at the edge or at the center of the section. When gg is determined find I by the following: *to the sum of the products*

of each area by the square of the distance from its center of gravity line to the gravity axis of the section add the moment of inertia of each section about its own gravity axis. It will be remembered that the moment of inertia of any rectangle about its own gravity axis is $I = bh^3 \div 12$ where h = the total height of the section.

Assume the section with sizes as shown in Fig. 132 then

$$x = \frac{70 \times 11.5 - 2 \times 10 \times 10}{70 + 20 + 54} = 4.2 \text{ in.}$$

$$I = 70 \times (7.3)^2 + 54 \times (4.2)^2 + 20 \times (14.2)^2 +$$

$$\frac{14 \times (5)^3}{12} + \frac{3 \times (18)^3}{12} + \frac{10 \times (2)^3}{12} = 10326$$

$$Z_t = \frac{10326}{9.8} = 1054 \text{ for tension}$$

$$Z_c = \frac{10326}{15.2} = 679 \text{ for compression.}$$

W is the pressure on the punch in pounds. If the ultimate shearing stress of mild steel be taken at 55,000 lb. per square inch, W would be 129,591 lb. Considering the trial section only on the tension side, since this is usually the weak side of the section, we have $S_1 + S_2 = S_t = 900 + 2189 = 3089$ lb. per square inch. This fiber stress would be large for cast iron in tension, hence another section must be selected.

Take for a second trial the section Fig. 133, we have, if worked as above

$$x = 2.97 \text{ in.}$$
$$I = 21{,}049.44$$
$$Z = \begin{cases} 1680 \text{ for tension} \\ 1317 \text{ for compression.} \end{cases}$$

$$S_1 + S_2 = S_t = 2154 \text{ lb. per square inch.}$$

In like manner we should work out the compression side by $S_1 - S_2 = S_c$. The algebraic sum of the two gives $571 - 2013 = -1442$ lb. per square inch. The sign may be considered either positive or negative since it merely indicates the direction in which the force acts and does not affect the magnitude of the force. See also Art. 135.

Any other section of the frame can be determined by finding S_2 in the manner shown above and combining with it the value of $S_1 = W \cos a \div$ area. The value of S_1 is a maximum when a is zero and becomes zero when a is 90°. It will be seen, Fig. 134,

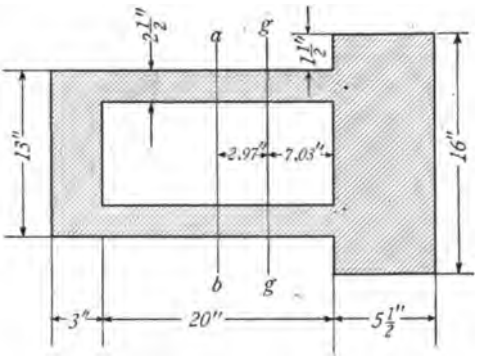

FIG. 133.

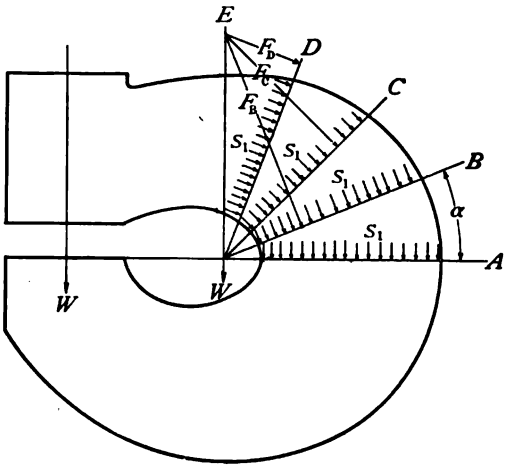

FIG. 134.

that at the section A, $S_1 = W \div$ area A; at B, $S_1 = F_b \div$ area B, but $F_b = W \cos a$ hence $S_1 = W \cos a \div$ area B; at C, $S_1 = W \cos a \div$ area C and so on until S_1 becomes zero at section E. At this point the frame should be examined for both bending and shearing and the larger requirement taken. In all probability section

E will be made larger than the calculated size to accommodate the finishing around the head. It will be satisfactory in this design if we obtain sections at $a=0$, 45 and 90 degrees.

To find any section, say $a=45$ degrees, determine the height of the gap, k, and draw the outline of the gap. The value k is controlled by the space taken up by the dies, metal to be punched, and clearance. It cannot be determined exactly, but a good estimate may be made. Assuming some section of the frame as Fig. 135 and solving for the fiber stress as before, we find

$x = 2.67$ in.

$I = 15{,}655.$

$Z_t = 1382.$

$S_1 + S_2 = S_t = 1872$ lb. per square in.

NOTE.—In finding M in $M = SZ$ the lever arm varies, depending upon the cosine of the angle a.

Investigate also for S_c.

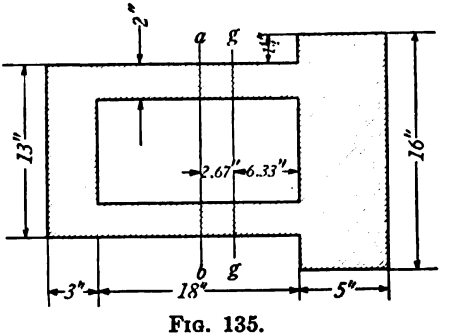

FIG. 135.

For the vertical section take Fig. 136, in which case we have

$x = 3.26$ in.

$I = 4411.79$

$Z_t = 655.$

$S_2 = 791$ lb. per square inch, which shows that the section could be materially reduced in size if it were desired. The reduction could very properly be made according to the dotted lines. If it were considered necessary, this section should also be investigated for compression.

To investigate for shearing on the vertical section we have,

allowing the shear to be absorbed by the entire section of 136 sq. in.,

$$S_s = \frac{129591}{136} = 953 \text{ lb. per square inch.}$$

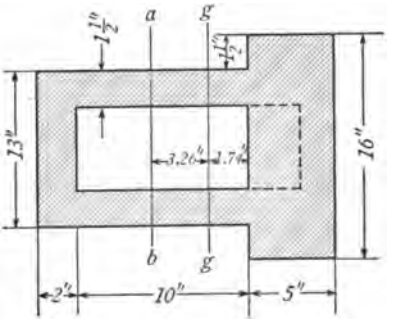

FIG. 136.

145. Having determined several important sections in the frame, the outline of the *G* part of the frame can be drawn. This outline will of course be modified somewhat for the shaft, head and leg.

It will be noticed that a somewhat higher fiber stress has been allowed in the material for this frame than in the material used in the frame of the first design. This is about as would be expected. Any casting planned to fill a very important place in the design of any machine would be made of the best close grained gray iron. It is advisable to keep the size of this frame as small as possible consistent with strength and, since the best of cast iron would have an ultimate strength of 25,000 to 30,000 lb. per square inch, it would be considered safe to allow a fiber stress of 2000 to 2500 lb. per square inch, which corresponds to a factor of safety of 12.

The shape of the section may be varied to suit the conditions, from a large and thin section as here treated, to a small compact and possibly solid section. The latter condition prevails in some machines where the gap is long and the main section would be necessarily crowded into the smallest space.

Steel cast frames are very common, especially on the larger machines. When made of steel the frame section may be made much smaller. $S_t = 12{,}000$ to $15{,}000$ lb. per square inch.

Tension bars are provided for machines with long gaps. These bars are very necessary when doing heavy duty.

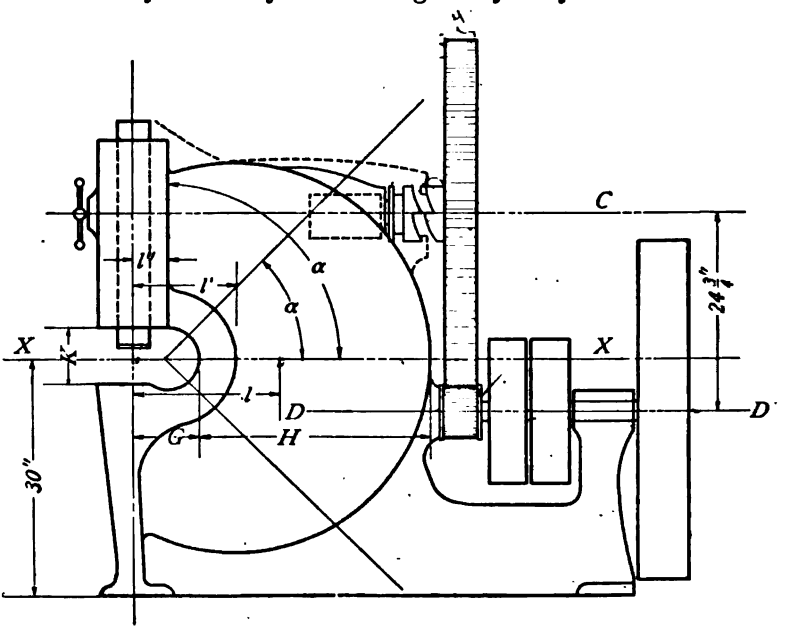

FIG. 137.

146. The Maximum Punching or Shearing Force is used in calculating the frame sections. The ultimate shearing stress of the metal multiplied by the area to be cut gives the maximum load on the punch or flat shear. If the maximum load on a *bevel shear* is desired, multiply the maximum load on a flat shear by the following:

THICKNESS OF THE METAL

	¾	⅞	1	1⅛	1¼	1⅜	1½	1⅝	1¾	1⅞	2
4° Bevel	.42	.48	.54	.61	.67	.73	.79	.85	.92	.98	
8° Bevel	.23	.3	.37	.44	.51	.58	.65	.73	.81	.88	.95

Look up articles on the Shearing of Metals in the *American Engineer and Railway Journal*, Vol. LXVII, page 142.

In any machine of this kind it is safe to allow 15 to 20 per cent for the friction of the parts while performing the heaviest duty.

The total pressure to be accounted for at the driving end in this machine will then be $129{,}591 \div .85 = 152{,}460$ lb. If the eccentricity of the cam be taken the same as the thickness of the thickest metal to be punched, $= \frac{3}{4}$ in., the twisting moment on the main shaft will be approximately $\frac{3}{4} \times 152{,}460 = 114{,}345$ inch pounds.

147. Working Depth of the Cut.—The actual cutting depth (depth of penetration) of a punch or flat shear may be used in determining the foot pounds of work done at the tool, and is a certain *percentage of the total thickness of the metal.* Generally the tool in its movement passes entirely through the metal, but the work of cutting is finished when the tool arrives at the depth of penetration. This percentage varies somewhat with the kind of the metal, but for mild steel it has been found by experiment (*Am. Mach.*, Oct. 12, 1905) to be

Thickness of metal, in inches	1	$\frac{3}{4}$	$\frac{5}{8}$	$\frac{1}{2}$	$\frac{3}{8}$	$\frac{5}{16}$	$\frac{1}{4}$	$\frac{3}{16}$	$\frac{1}{8}$	$\frac{3}{32}$	$\frac{1}{16}$	$\frac{1}{32}$
Depth of penetration in per cent of plate thickness	25	31	34	37	44	47	50	56	62	67	75	87

Thus the work of cutting is finished when the punch (or flat shear) has reached a depth of $.25 \times 1 = .25$ in. in a 1-in. plate, .185 in. in a $\frac{1}{2}$-in. plate, .125 in. in a $\frac{1}{4}$-in. plate, and so on.

148. Diameter, Width and R.P.M. of the Pulleys.—Table LVIII gives values agreeing fairly well with current practice for

TABLE LVIII

Machine will punch	Diameter of pulley	R.p.m.
$\frac{1}{4}$ in. $\times \frac{1}{4}$ in.	10	200 to 250
$\frac{1}{2}$ in. $\times \frac{1}{2}$ in.	12	200 to 250
$\frac{3}{4}$ in. $\times \frac{3}{4}$ in.	16	175 to 200
1 in. $\times$ 1 in.	18	150 to 175
2 in. $\times$ 1 in.	30	150 to 175

the diameter and revolutions per minute of the pulleys. To determine the width of the pulley face, or the width of the belt, no definite rule can be stated. Practice varies between a 2-in. belt on a $\frac{1}{4}$-in. $\times$ $\frac{1}{4}$-in. machine, and a 6-in. or 7- in. belt on a 2-in. $\times$1-in. machine. Calculations for belt sizes on such machines do not give very satisfactory results because of the small percentage of each revolution that the machine is actually working. It is a good experience, however, if each man would apply a few trial conditions and note the results. First find the effective pull P on the belt, by the horse-power formula or by moments from the cam shaft, assuming the punch or shear to be cutting full value all the time, and then take the percentage of this which is represented by the proportion of the total time that the cutter is actually working. Figure the belt from this result as in Art. 117. In all probability, catalog sizes will finally be taken.

149. Fly-wheel. *Weight.*—The weight of the fly-wheel may be obtained by either one of two methods; first, by assuming the wheel, when running at full speed, to have stored up energy enough to do a certain definite work; second, that the wheel shall have only a certain allowable fluctuation from full load to no load. From the first method, a fly-wheel for a machine of this kind may be designed to fulfill a number of conditions, from a wheel such that its kinetic energy will just equal the energy absorbed by the machine during punching (in which case if we disregard the belt's action, the velocity of the wheel would become zero after each hole punched), to a wheel of such a size that the residual energy will be sufficient to keep the speed fairly constant. Current practice approaches the former and in this consideration will be adopted.

Having given the force to be accounted for at the driving end as 152,460 lb., assume that this force acts through, say a maximum of one-half the total depth of the plate, $\frac{3}{8}$ in. or $\frac{1}{32}$ ft., then the energy exerted would be 4764 foot pounds. Apply the formula $Wv^2 \div 2g$ to the mean rim diameter, where W = weight of wheel in pounds assumed centered at the center of the rim and v = velocity at any point in this circumference in feet per second. Assuming 36 in. as this diameter with 150 r.p.m. (see Art. 150) we have

$$\frac{Wv^2}{2g} = 4764; \; W = 553 \text{ lb.}$$

The depth of penetration in this application is not used according to the table. This should not be confusing since it is merely for illustration.

Find the weight of the fly-wheel also from some acceptable formula based upon the fluctuation of speed, using for the allowable fluctuation 20 to 25 per cent, and check with the above.

Arm.—The fly-wheel arm may be calculated as follows: estimate the time required in punching one hole, then find the distance through which a point on the center line of the rim will move during this time; this will be the value V in $PV = 4764$. Since the shaft is running 15 r.p.m., each revolution will take

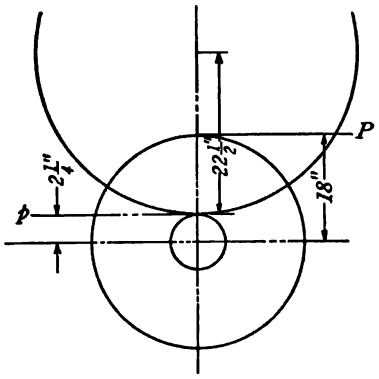

FIG. 138.

four seconds. Assuming the velocity of the punch during action to be the same as that of the cam center we have $3.1416 \times 1.5 \div 4 = 1.1781$ in. per second. The time occupied in punching is $\frac{3}{8} \div 1.1781 = .318$ second. The velocity of the rim of the wheel is 1413.7 ft. per minute = 23.56 ft. per second, from which we find that the rim will travel 7.5 ft. before stopping.

Applying $PV = 4764$,

$$P = 635 \text{ lb.}$$

The value of P may be found in another way. First, with the radius of the large gear = 22.5 in., find the force p between the gears, Fig. 138. From the moments around the cam shaft, this is

$$P=\frac{129591\times 3}{.85\times 4\times 22.5}=5082 \text{ lb.}$$

and by moments around the driving shaft

$$P=\frac{5082\times 9}{4\times 18}=635 \text{ lb.}$$

Having found P, the tractive force due to the stored up energy of the wheel rim, obtain the large dimension of the arm at the center of the shaft by the formula $\frac{Pr}{N}=.05b^3S$. If N, the number of arms, $=6$ and $S=1500$,

$$b=\sqrt[3]{\frac{635\times 18}{6\times .05\times 1500}}=3 \text{ in.}$$

A low fiber stress is used because of unknown stresses that are apt to be in the casting. Straight arms are preferred to curved arms and they should have well-rounded fillets next to the hub and rim. The section of the arm near the hub and that at the rim are always similar. The dimensions at the rim should be taken not less than two-thirds of the corresponding dimensions at the hub. The ordinary arm has the thickness at the center of the section about one-half of the length of the section. The radius of the side of the section is about three-fourths of the longest dimension of the section. The value b as given in the formula is sometimes taken at the center of the shaft and frequently at the edge of the hub. This, it will be seen, makes very little difference in the average pulley.

150. Driving Shaft.—If the bearings are close to the pulley and gear the bending will not be excessive and the shaft may be figured with a low fiber stress merely to resist twisting. Taking $S=6000$, the diameter of the shaft will be 2.2, say $2\frac{1}{4}$ in.

On machines where the pull of the belt and the side thrust from the gears are fairly great, also when the bearings are far apart, it is necessary to design the shaft for combined twisting and bending. In such a case find the side thrust due to each, the belt and the gears, and calculate the shaft from the bending moment as a beam fixed at the ends and loaded at two points. See Art. 4.

In locating the shaft *DD*, it is first necessary to have the approximate position of the main shaft and the diameters of the gears. Knowing the angular velocities of the two shafts the diameter of the small gear may be assumed and the distance between the shaft centers obtained. In this machine if the cutting speed of the punch is 1 in. per second, the center of the cam will travel approximately $60 \div 4.71 = 13$ revolutions per minute. Calling this 15 and the revolutions per minute of the pulley shaft 150 the ratio of the gears is 10. With $4\frac{1}{2}$ in. as the diameter of the pinion, the shafts will be $24\frac{3}{4}$ in. between centers.

151. Gears.—Design according to Art. 92 for machine cut teeth. The pinion should be shrouded. The diameter of $4\frac{1}{2}$ in., as used in Art. 150, is merely for illustration. This value would be rather small for the construction of a perfect tooth. The arms of the large gear are similar to those in the fly-wheel excepting that the driving force will be absorbed by not more than one-half the number of arms in the gear.

152. Main Shaft.—The main shaft or "cam shaft" as it is sometimes called would be made of hammered steel. Figs. 139 and 140 show two common forms. B_1, B_2 and B_3 are journals, and C is the cam which operates the punch. The greater part of the thrust from the punch is absorbed at the journal B_2, B_3 being added for the double purpose of reducing the strain of the shaft and for an outside connection for adjustments.

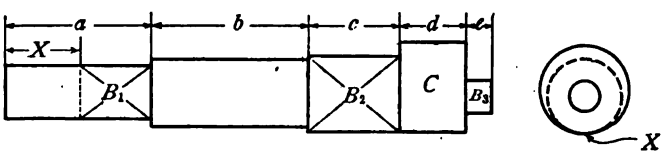

FIG. 139.

In designing the shaft the part *a* may be figured to resist the twisting moment due to the thrust on the gear *x*, allowing a fiber stress of, say, 6000 lb. per square inch for shear. It will be noticed, however, that the thrust on the gear produces a bending moment on the shaft, the lever arm being $\frac{x}{2}$. This bending

moment may be of such magnitude as to make it necessary to use the combined formula. It would be well to obtain the diameter from both formulas and check them.

The length of the journal may be taken from 2 diameters to 2.5 diameters of the shaft. The length of b will be quite variable and will be governed by the frame of the machine. The diameter of b will depend upon the judgment of the designer. In some shafts it is made equal to the diameter of the left journal while in others it is enlarged to the size of the main journal. A high speed machine would require a larger and stiffer shaft than a slow speed machine, because of the heavy shocks to which the shaft is subjected, hence the diameter of b would be as large as possible.

Take the size of the main journal such that the pressure per square inch of projected area will not exceed 3000 lb. assuming the entire thrust from the punch to be taken up by it and that of the cam not to exceed 8000 lb. Lower values than these are desirable, especially on the cam, where 5000 lb. per square inch of projected area is a good value. It will be seen from the

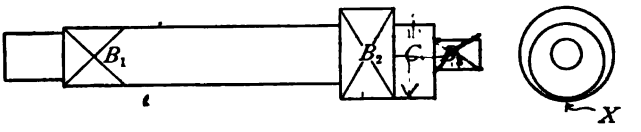

FIG. 140.

above that the projected area being constant, a bearing may be changed in shape decidedly and yet give good service. As an illustration B_2 may be long and slender as in Fig. 139, or short and thick as in Fig. 140, so long as the shaft at this point is stiff enough to resist bending and shear. Conditions within the machine itself usually determine the shape of bearing and cam. When the sizes are approximately determined, they should be constructed graphically to scale, usually having the two surfaces continuous along one line as at x.

The cam varies from 3 to 6 in. in length, and from 6 to 12 in. in diameter. The diameter of the bearing in such a case is governed somewhat by the eccentricity of the cam.

The cross-sectional area of the bearing B_2 along its outer face

next the cam must be sufficient to resist the effect of *shear;* it must also resist the *bending moment* produced by the thrust multiplied by the half length of the cam $\left(\frac{d}{2}\right)$ and the torque produced by the thrust multiplied by the eccentricity of the cam. This should be worked by the combined formula, remembering that B_3, where used, would reduce this bending moment somewhat.

In machines where the distance between B_1 and B_2 is great there is a bending of the shaft between the bearings. This is especially true where B_3 is omitted as in some horizontal machines. Such a condition is equivalent to a beam in flexure with the reactions at B_1 and C and the applied load at B_2. The effect, however, is not the same in the calculations as a simple beam because of the support given to it by the boxes.

It is safe to assume that the bearings are sufficiently loose to allow some bending, but not loose enough to consider it as a simple beam. Probably a safe assumption would be 50 per cent of the maximum load applied at the cam center and resisted at the bearing centers as supports.

The frame should be fitted with a phosphor-bronze bushing $\frac{1}{4}$ in. to $\frac{3}{8}$ in. in thickness surrounding the journal B_2. This bushing is made a forced fit with the frame.

The sizes of B_3 would vary between 2 in. and 4 in. for both diameter and length.

Application.—Calculating the shaft for twist at its smallest diameter, at the gear, gives $d=4.59$, say 4.5 in.

The cam diameter, assuming a length of 4 in. and a pressure per square inch of 5000 lb. is $\frac{129591}{5000\times 4}=6.5$ in.

B_2 will then be 5 in. diameter and, if we allow 2500 lb. per square inch projected area, will have a length of $\frac{129591}{2500\times 5}=10.4$ in., say 11 in.

B_3 may be taken $2\frac{1}{2}$ in. long by 3 in. diameter.

153. Sliding Head.—Of the different types in use, two of the very common ones are shown in Figs. 141 and 142, the former being used in the smaller machines. The chief objection to the

bronze block is its liability to wear unevenly thus causing lost motion and an irregular movement of the block while punching. In the latter form, the entire thrust is carried on a hardened steel block set into the cast iron sliding head and the wear, if any, is practically uniform. The size of the bearing surface in the steel

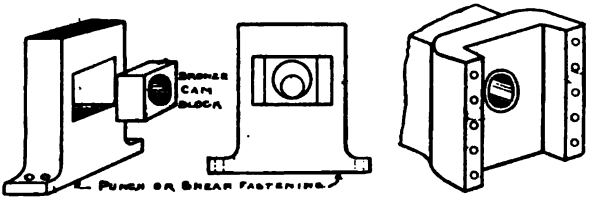

FIG. 141.

block may be obtained from the crushing strength of the steel casting. If this value be taken at 90,000 lb. per square inch with a factor of safety of 6, the projected area of this bearing will be $129{,}591 \div 15{,}000 = 8.6$ sq. in., from which, if the length of the cam be 4 in., the breadth of the bearing will be 2.15 in. say $2\frac{1}{4}$ in. The breadth of the sliding head face will be seen to depend upon the construction of the vibrating arm. Make the vibrating arm a steel casting and allow from $\frac{3}{4}$ in. to $1\frac{1}{4}$ in. at x, and a small clearance at y. This part of the work must be done graphically. The values a and b will depend respectively, upon the width of the frame and the diameter of the bolts used.

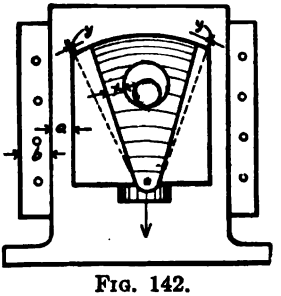

FIG. 142.

154. Clutches and Transmission Device.—In operating any machine having an intermittent motion a clutch is commonly used to serve as a connector between the power supply and the work. The application of the clutch to the simple punching or shearing machine is shown in Fig. 143. It is usually applied directly to the hub of the large gear and is operated through a system of levers and cranks by either hand or foot. When the punch is not operating, the large gear, which is designed with a long hub to act as a bearing, runs loose, the shaft remaining

stationary. The clutch sleeve slides on the shaft over a splined key and when the punch is to be operated this sleeve is thrown to engage with the corresponding part on the gear hub. When the hole is punched a counterweight brings the sleeve back to its former position and the movement of the punch ceases.

Clutches are formed each having two, three, or four jaws. These jaws may be formed as a part of the wheel hub as shown at *A* and *B*, cast from steel and bolted to the flat face of the wheel hub as shown at *C*, or cast from steel and fitted to the interior of the wheel hub as shown at *G*. In heavy work *C* and *G* are preferable.

That part of the clutch subjected to the greatest wear is the front face of the jaw. This is sometimes fitted with a plate of high carbon steel which can be replaced when necessary with a new one. The rear face of the jaw is usually perpendicular to the front face of the wheel but is sometimes cut to an angle of 30 to 45 degrees. There should be sufficient clearance between the jaws on the sleeve and the wheel to enable them to be easily thrown together while in motion. This should be from $\frac{1}{8}$ in. to $\frac{1}{4}$ in.

The clutch sleeve may be shaped as shown in either *D* or *F*. The following sizes, table LIX will meet average requirements.

TABLE LIX

Shaft =	2 in.	3 in.	4 in.	5 in.	6 in.
a	$\frac{3}{4}$	1	$1\frac{1}{4}$	$1\frac{1}{2}$	$1\frac{3}{4}$
b	$\frac{3}{4}$	1	$1\frac{1}{4}$	$1\frac{1}{2}$	$1\frac{3}{4}$
c	—	*f*	—	(a+b)	
d	4	$5\frac{1}{2}$	7	9	$10\frac{1}{2}$
e	5	7	9	11	12
f	3	4	$5\frac{1}{2}$	7	8
g	$\frac{3}{4}$	1	$1\frac{1}{4}$	$1\frac{3}{8}$	$1\frac{1}{2}$

There are two general methods of designing the transmission device; the first and simpler one *E* having the clutch between the gear and the frame, and the second *H*, having the gear between

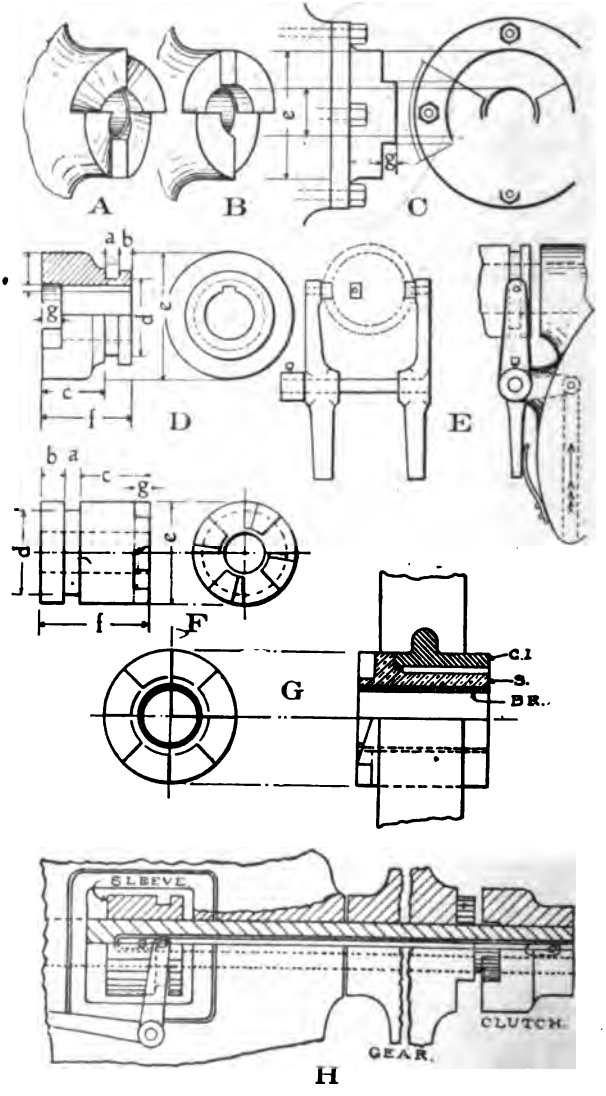

FIG. 143.

the clutch and the frame. The latter method necessitates a hollow shaft in order to obtain a rigid connection between the sleeve and the clutch and is not much used on small machines.

155. Punch, Die, and Holders.—In all punch and die work the die is made a little larger than the punch for clearance. The

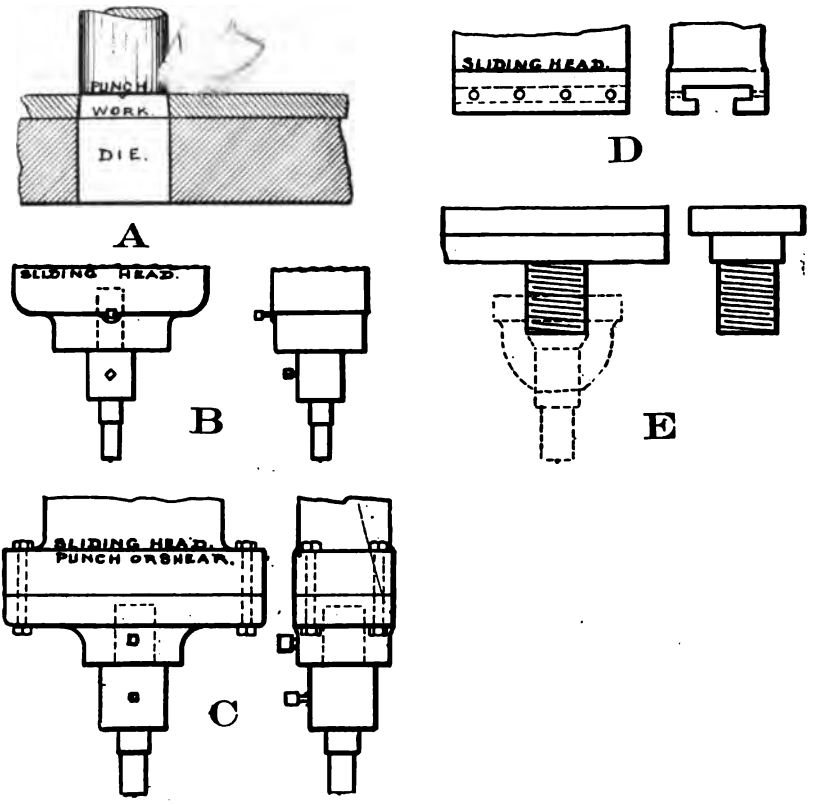

FIG. 144.

action of the punch on the material is shown in *A*, Fig. 144, the hole tapering from the size of the punch on one side to the size of the die on the other. This taper is slight and is considered of no consequence in rough work, but in finished work it is a difficulty that can easily be remedied by reaming the hole afterward. For reference see "Dies, Their Construction and Use." Woodworth

There are various methods of fastening the punch to the sliding head; *B* shows the bottom of the sliding head fitted with the square ended socket and punch. A screw ended socket is sometimes used as at *E*. *C* shows the bottom of the head flanged and drilled for the attachment of either punches or shears. In single machines it is desirable that both punching and shearing be done. Where such is the case this is a good form. Side adjustment of the punch may easily be made if the head be slotted as at *D* and fitted with a tee block as *E*. Dies are made from high carbon steel and are held in a holder; the holder in turn is bolted to the horizontal face of the frame. A certain amount of adjustment is necessary in locating the die, consequently the holder is made in two parts.

Other Types of Shearing and Punching Machines

The smallest sizes of punching and shearing machines are operated by hand power or foot power, medium sized machines are operated almost exclusively by belt and the largest machines are operated by belt, steam, water or electricity as shown in Figs. 145, 146, 147, and 148 respectively. These designs show present practice and are added to enable the designer to become more familiar with the form of the parts and the make-up of the machines in general.

It will be noticed that in the larger machines the frame is of such a size as to project below the floor, the weight being carried on legs or lugs cast on the side of the frame. It will also be noticed that arrangements are made at the top of the frame for the attachment of a crane to assist in handling the material.

Most single machines have the lower end of the ram so constructed that either punches or shear blades may be attached. This requires some little time in changing and adjusting the tools. Double machines avoid the necessity of such changes.

Machines such as are here represented require more work than should be expected of one assignment. They may, however, be assigned to two men. This is especially true of the double machines, in which case the frames may be worked up independently, and the driving mechanism, jointly. Electric motor sizes and capacities may be obtained from any standard catalog of electric machinery.

FIG. 145.

FIG. 146.

Fig. 147.

Fig. 148.

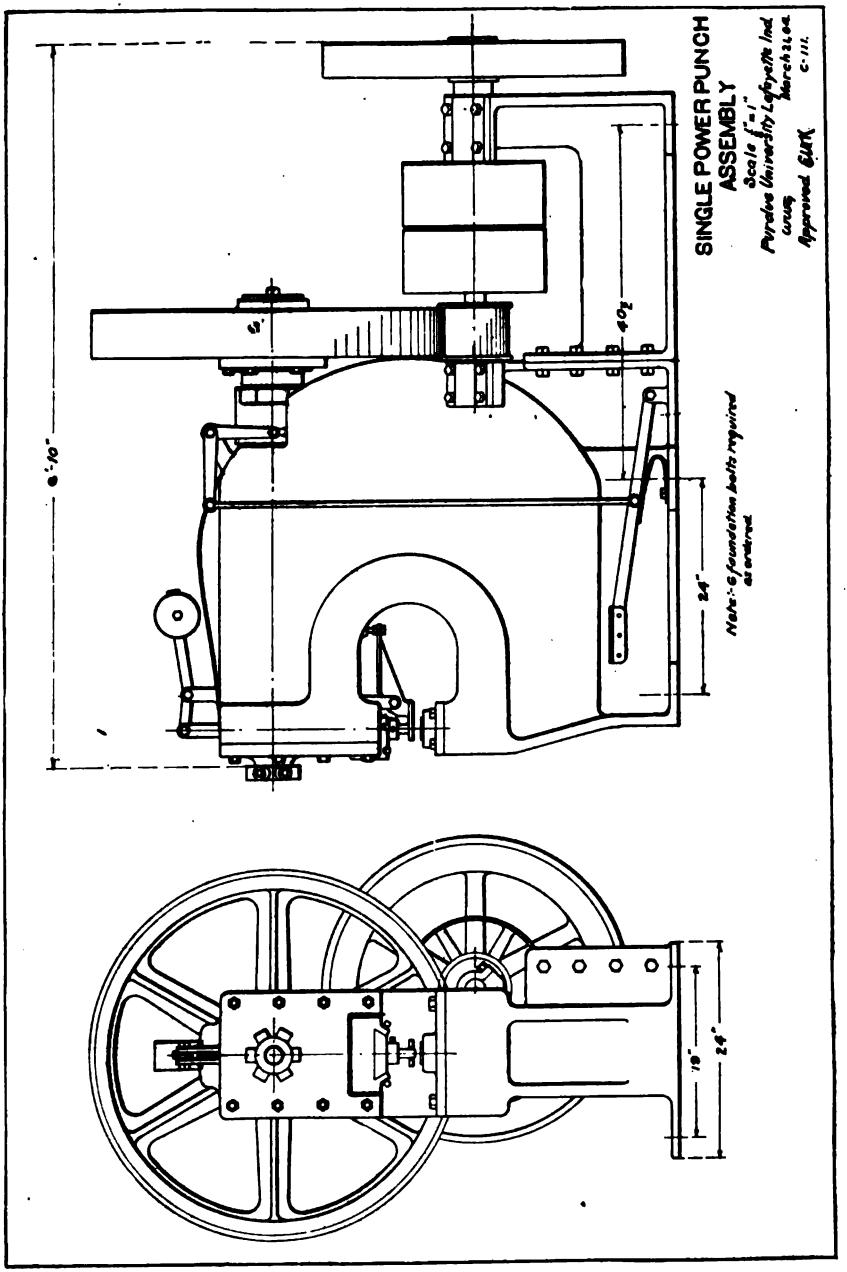
SINGLE POWER PUNCH
ASSEMBLY
Scale 1"=1"
Purdue University Lafayette Ind.
Approved
6'-10"
40½
24"
Note:- 6 foundation bolts required as ordered
19"
24"

PLATE C 4

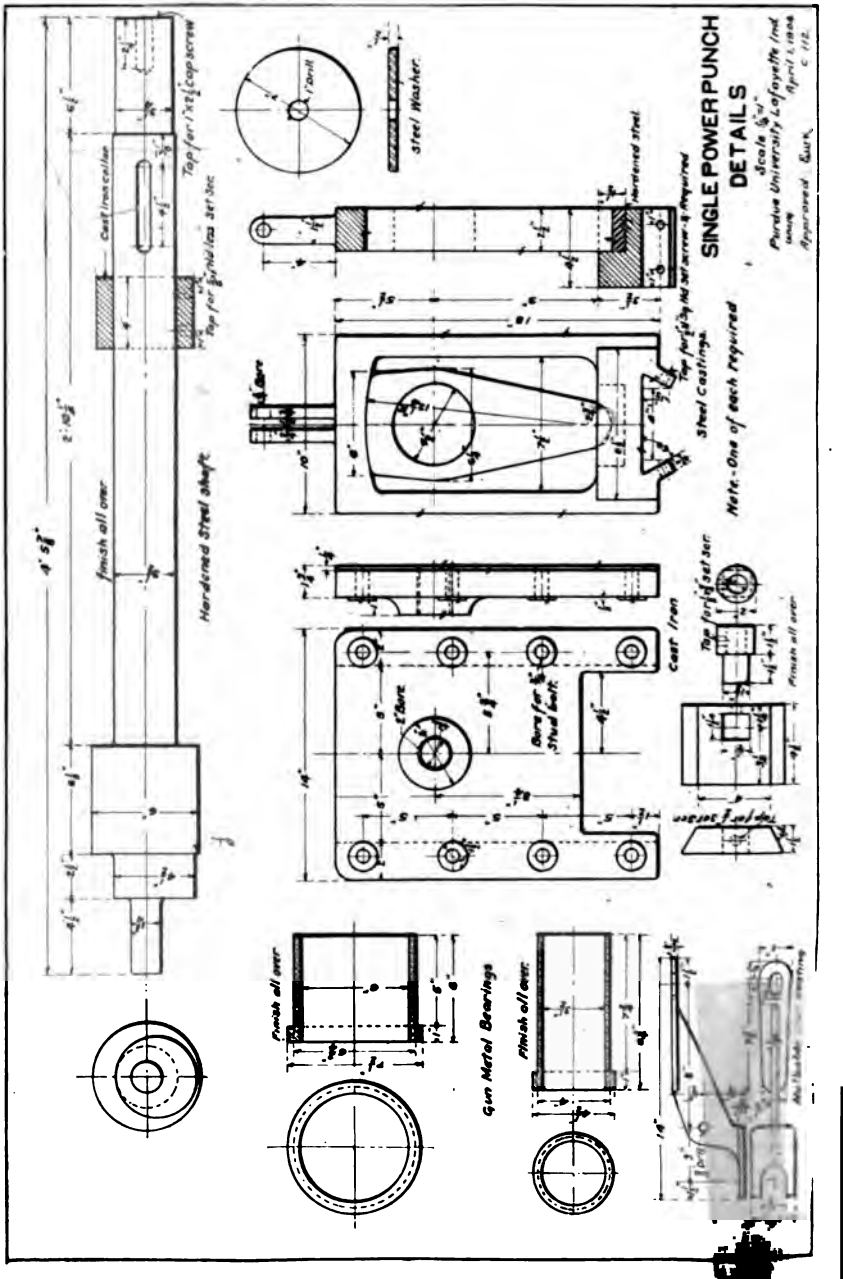
SINGLE POWER PUNCH
DETAILS
Purdue University Lafayette Ind.
Hardened Steel shaft
Cast Iron
Steel Castings
Note.-One of each required
Steel Washer
Gun Metal Bearings
Finish all over
Cast Iron collar
Hardened steel

PLATE C 5

PLATE C 6

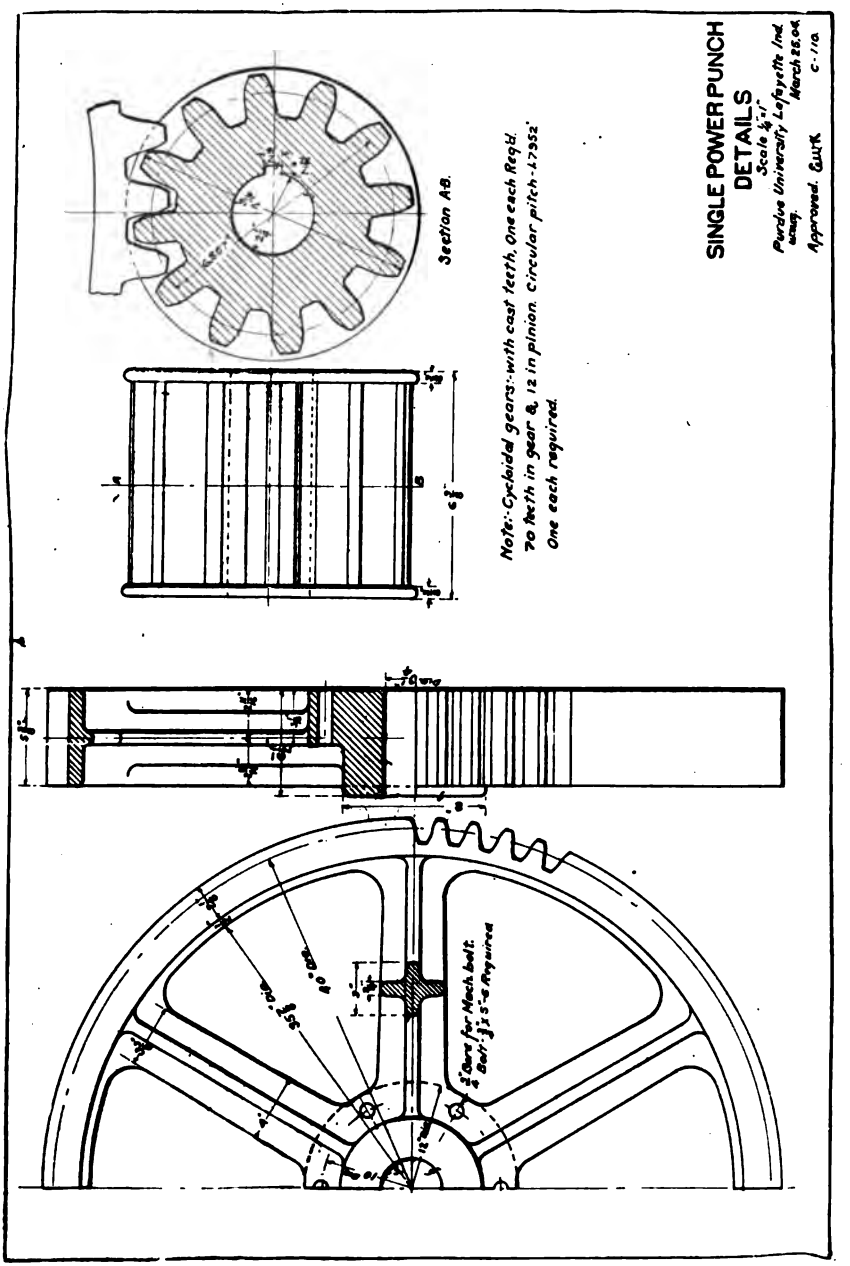
Section AB.
Note:-Cycloidal gears-with cast teeth, One each Reqd.
70 teeth in gear B, 12 in pinion. Circular pitch-1.7952"
One each required.
SINGLE POWER PUNCH
DETAILS
Scale ½"=1"
Purdue University Lafayette Ind.
Dwg.
March 25.04
Approved. G.W.K.
C-110

PLATE C 8

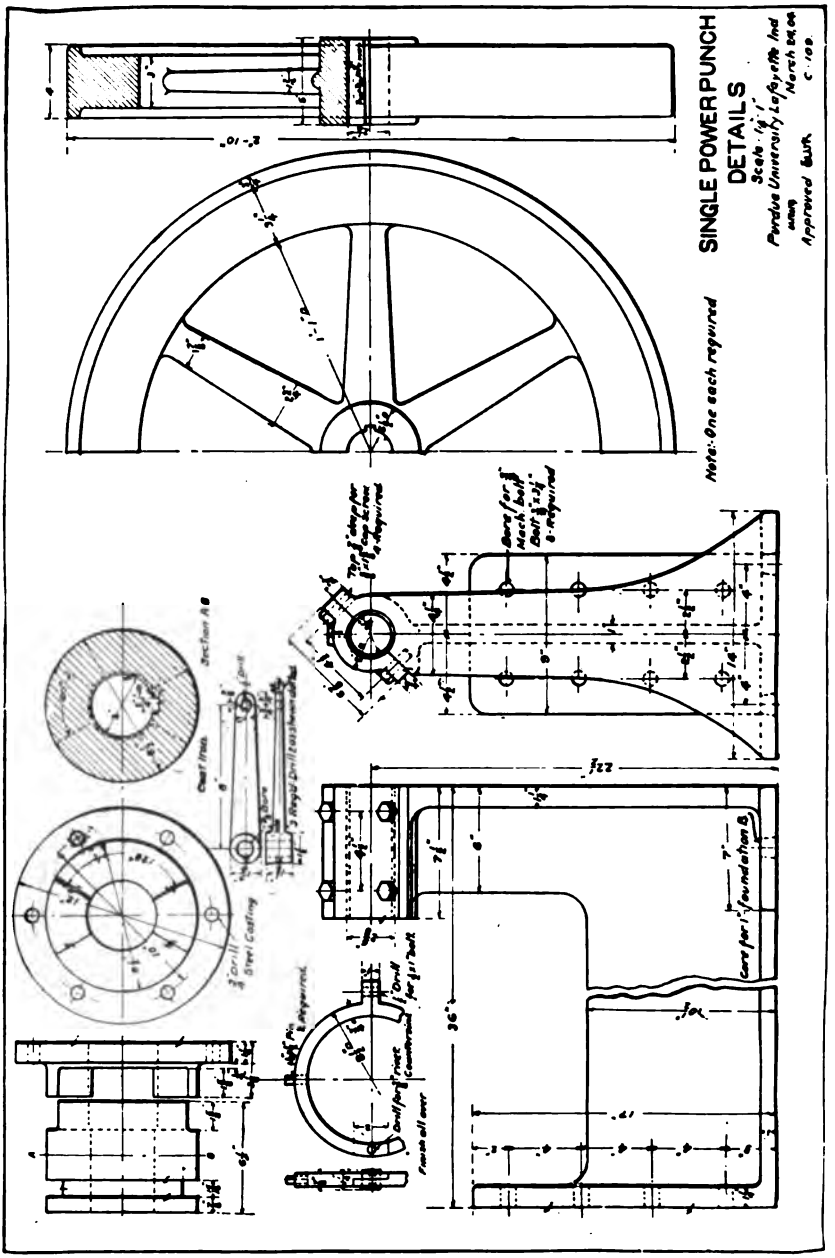
SINGLE POWER PUNCH
DETAILS
Note: One each required
Section AB
Cast Iron
Steel Casting
Finish all over
Core for 1" foundation B

PLATE C 7

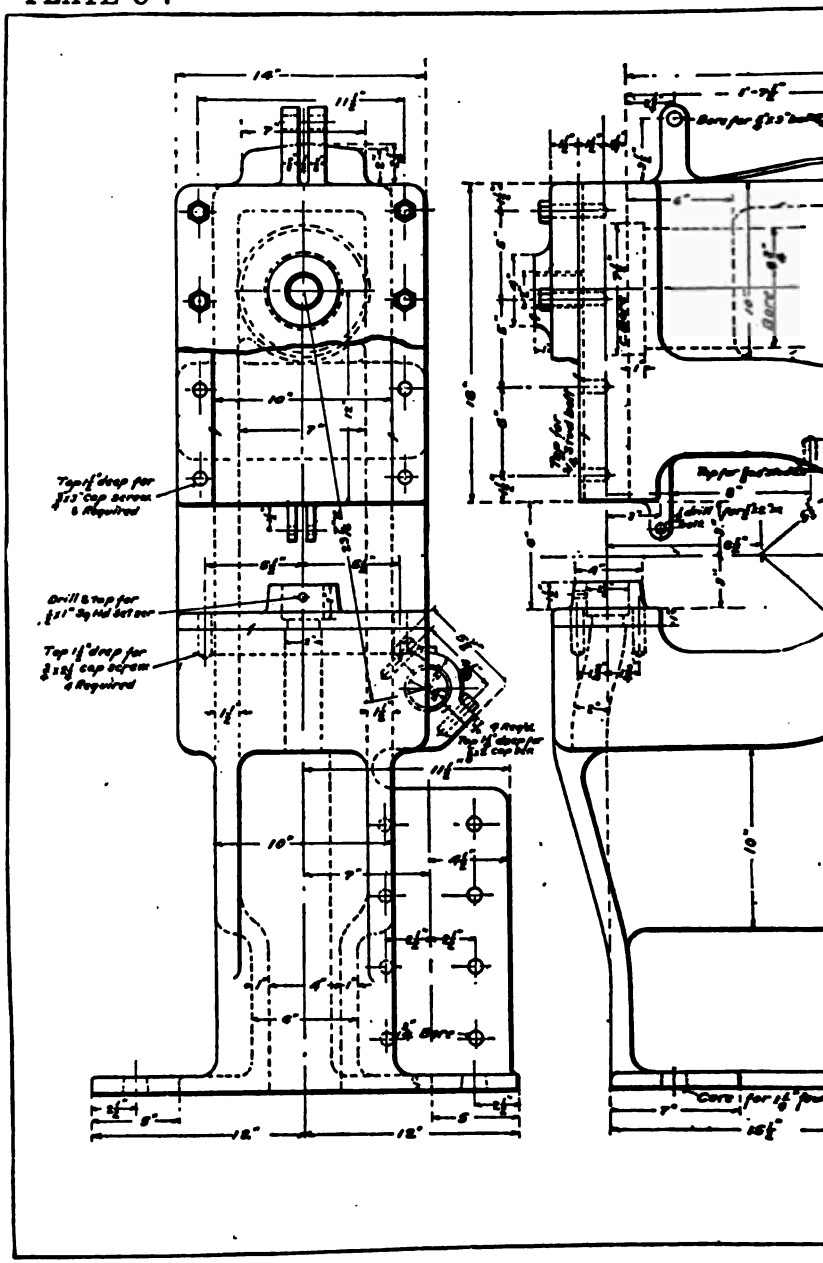
14"
11½"
10"
7"
8½"
6½"
Top 1½" deep for ⅝" cap screw 6 Required
Drill & tap for .⅝" Sq hd set scr
Top 1½" deep for ⅝" cap screw 6 Required
Top 1½" deep for ⅝" cap bolt
10"
7"
4½"
4"
6"
⅝" Bore
5½"
5"
12"
12"
5
5½"
Back
Top for ⅝" Stud bolt
Top for ⅝" Stud bolt
Drill for ⅝" bolt
10"
Core for 1⅛" hole
7"
16½"

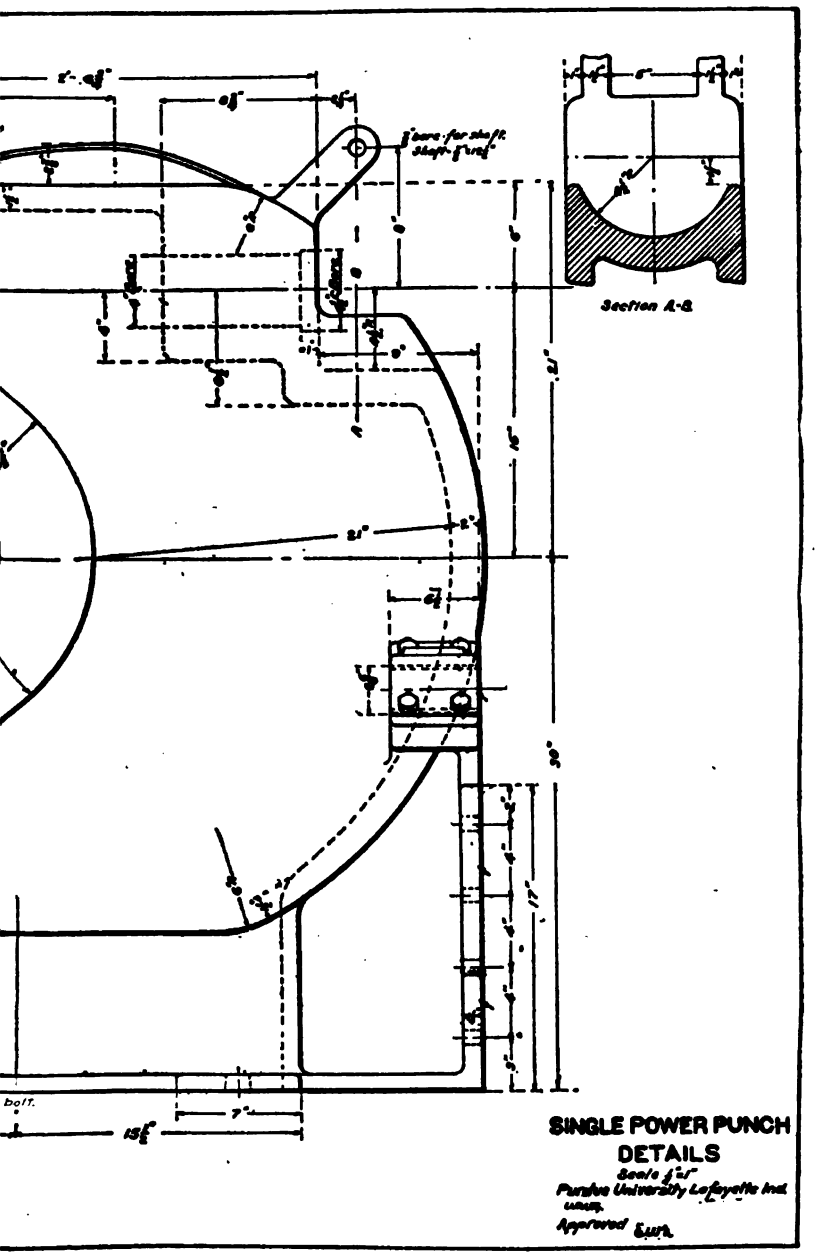
Section A-B
bolt.
SINGLE POWER PUNCH
DETAILS
Scale 1/2"=1"
Purdue University Lafayette Ind.
Approved

First Alternate, Design No. 2

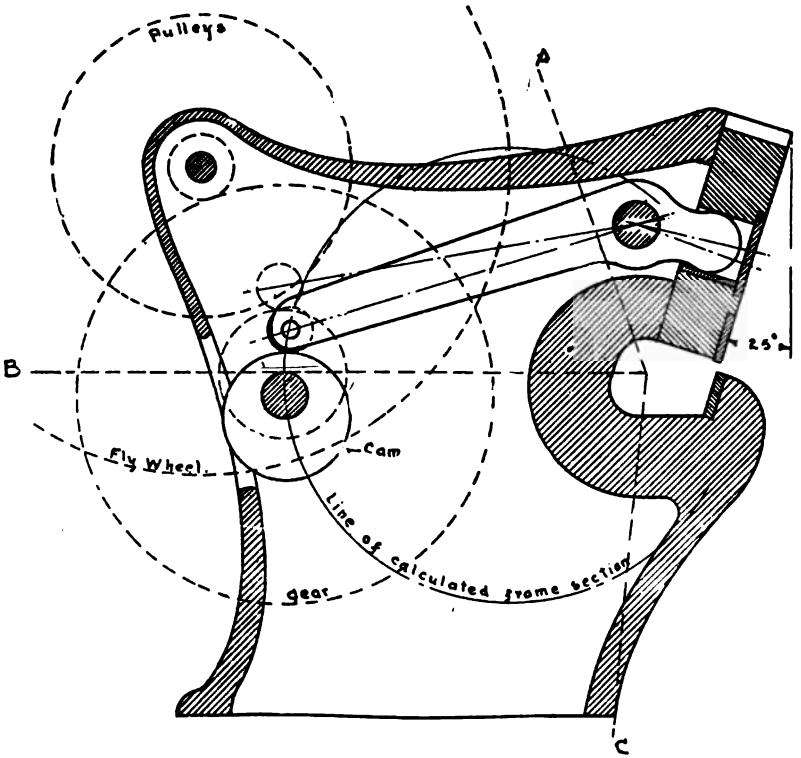

FIG. 149

THE BEVEL SHEAR

(Niles-Bement-Pond Catalog)

156. Assignment.—

Kind of material to be sheared.....

Width of plate to be sheared (6 to 12) ..... in.

Thickness of plate to be sheared ($\frac{1}{4}$ to 1)..... in.

Depth of throat (6 to 18) ..... in.

Strokes of the ram per minute (15 to 20).....

The frame sections may be calculated, if desired, to a regular outline as shown in the dotted lines, after which modifications in this outline may be made by approximation. A better way, however, would be to sketch the approximate longitudinal frame section as above and figure for each of the several irregular sections, as *A*, *B* and *C*.

Second Alternate, Design No. 2

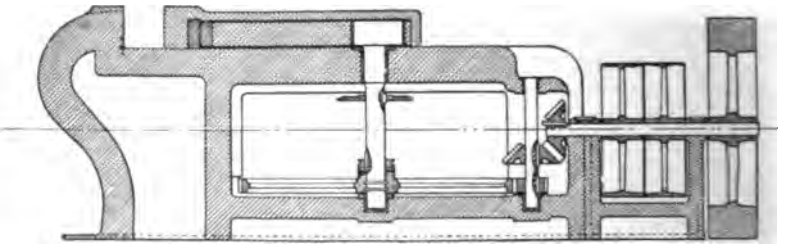

FIG. 150.

HORIZONTAL POWER PUNCH

(Niles Tool Works Co. 1900 Catalog)

157. Assignment.—

Kind of material to be punched. . . . . .
Size of largest hole punched. . . . . in.
Thickness of the plate. . . . . in.
Distance of center of hole from edge of plate. . . . . in.
Number of holes punched per minute. . . . . .

Horizontal punching machines may be designed in the same general way as the one described in the notes. It will be found that the frame sections may be calculated in the same way although the frame not being so regular will require a little more care in selecting the shapes and sizes of the various parts of the sections.

Machines of this type usually have a more shallow throat than the vertical type.

The line of the punch center may be raised from the center of the ram to the upper edge and is found convenient when punching near a shoulder.

Third Alternate, Design No. 2

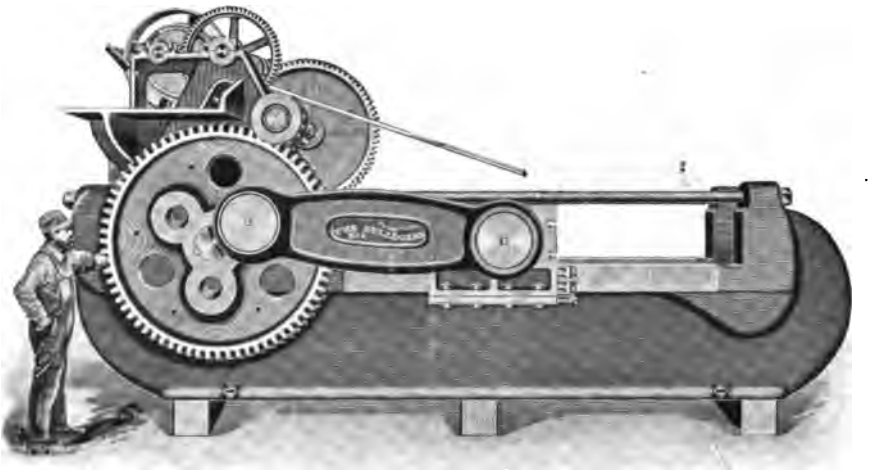

FIG. 151.

THE BULLDOZER

158. Assignment.—

Length of stroke (6 to 18)..... in.
Maximum pressure (5000 to 30,000)..... lb.
Number of strokes per minute (10 to 15)..... ..

The Bulldozer, one of the most powerful of the horizontal presses, is used in forming or squeezing metals to shape between large dies in such processes as upsetting and bolt heading. It is also occasionally used in punching and straightening. The dies are very heavy, and sometimes the stroke is made long enough to permit a number of dies being inserted at one time, so as to allow several operations on the specimen without reheating.

Assume a typical work card, having the ordinates represent total pressures in pounds and the abscissas represent per cents of stroke. Let the work to be performed be such that the dies first strike the specimen at 25 per cent of the stroke, also let it require the following total pressures to complete the work:

Per cent of stroke.....	25	30	35	40	50	60	70	80	90	95	100
Per cent of max. pressure	00	60	70	75	80	82	78	75	75	80	100

Fourth Alternate, Design No. 2

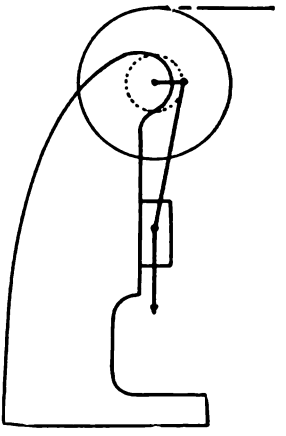

FIG. 152.

ATLAS POWER PRESS

(Atlas Machine Co. Catalog)

The press shown in Fig. 152 is designed to take the place of the ordinary foot-press in doing light blanking, perforating, riveting, forming and closing. The clutch is of the standard Johnson type. A ball-and-socket joint between the shaft and the gate gives the latter a vertical adjustment of about 1½ in. The machine is furnished with a combination pulley and balance wheel. The mechanism of the machine is shown to the right. The following approximate sizes may be used for checking:

From bed to gate in lowest position	6 to 7 in.
Stroke	1½ in.
Distance between uprights	3⅝ to 6 in.
Bed surface	7×10 to 8×12 in.
Weight of wheel	50 to 100 lb.

159. Assignment.—

P (crank 5 degrees from vertical, 1000 to 2000)	lb.
T (depth of gap)(4 to 6)	in.
Revolutions per minute (200 to 300)	

Fifth Alternate, Design No. 2

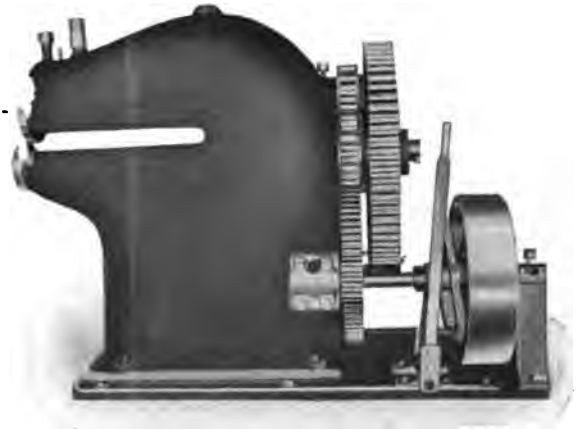

FIG. 153.—THE LENNOX ROTARY SHEAR.
(Joseph T. Ryerson Catalog)
(Bethlehem Foundry and Machine Co. Catalog)

160. Assignment.—

Kind of material to be sheared.....
Depth of throat (6 to 36)..... in.
Thickness of plate ($\frac{1}{8}$ to $\frac{3}{4}$)..... in.
Diameter of cutters (6 to 12)..... in.
Rim velocity of cutters (600 to 1000 ft. per hour).....

NOTATION

Shaft L is adjustable at lower end by screw H around R as a pivot. See Fig. 155.

Shaft N is adjustable in line parallel to center of shaft by nut T. J and O are gears of same diameter. The main pulley of the machine runs from 150 to 250 revolutions per minute. The cutters at D may be set apart a distance as great as one-fourth the thickness of the plate; the exact amount can best be determined by the experience of the operator. The exact force W at the cutters tending to rupture the frame is rather an indeterminate quantity but a safe value may be found by the following formula:

$$W = Af = tf\sqrt{tr - \frac{t^2}{4}}\left[1 - \left(.6834 + \frac{t^2}{40\,r}\right)\right]$$

where t = thickness of the metal to be cut; r = radius of the cutters; f = the ultimate shearing strength of the metal; and A = area of the metal being cut at any time, assuming the cutters to be in contact at the center line.

Fig. 154.
Lennox Rotary Bevel Shear

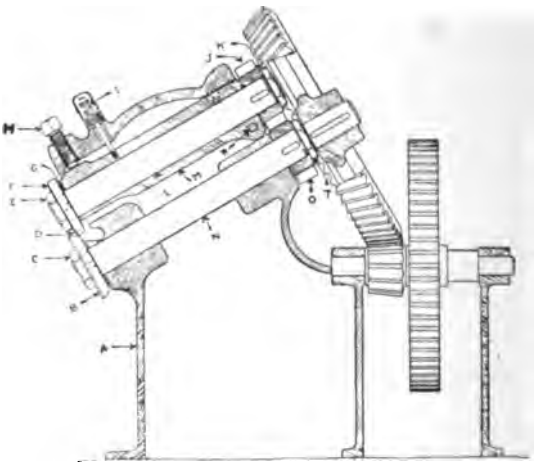

Fig. 155.
Section of Shear

Sixth Alternate, Design No. 2

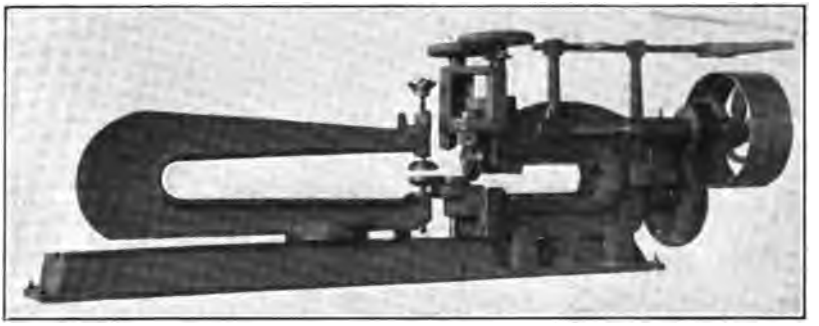

FIG. 156.—SHEET METAL FLANGER AND DISC CUTTER.
(Niagara Machine and Tool Works Catalog)

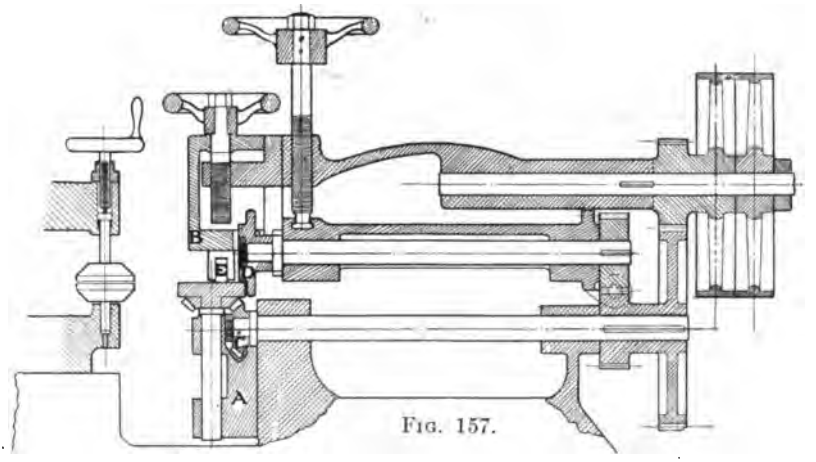

FIG. 157.

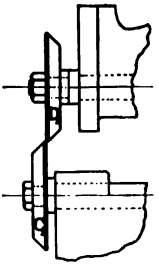

The section shows the machine with flanging rolls. These may be changed to cutter rolls as shown at the left. Other small rollers hold the metal to the plate while being operated upon. Sizes of flanges obtained in soft sheet steel as follows: 10 to 16 guage, $\frac{5}{8}$ to 1 in.; 16 to 20 gage, $\frac{3}{8}$ to $\frac{5}{8}$ in.; 22 to 24 gage, $\frac{1}{2}$ in. Machine will cut up to No. 8 gage and flange to No. 10 guage.

161. Assignment.—

P = (1000 to 2000) ..... lb.
T (depth of throat on machine, 12 to 20).... in.
G (depth of throat on circle arm, 30 to 40).. in.
Speed of the tool (15 to 20) ...rev. per minute.

Seventh Alternate, Design No. 2

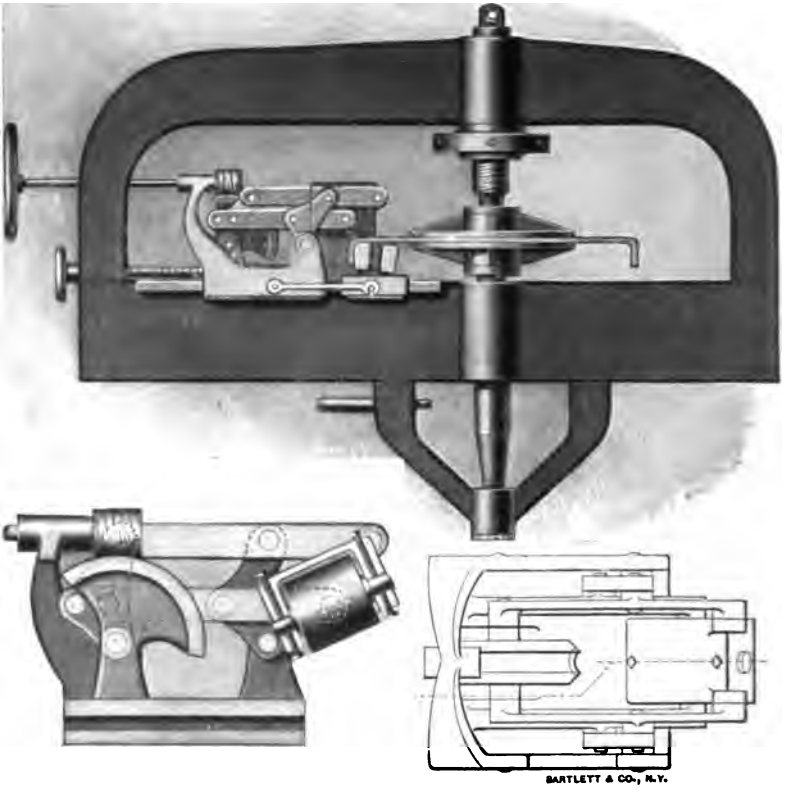

FIG. 158.—BOILER HEAD FLANGING MACHINE DETAILS.
(Niles-Bement-Pond Catalog)

162. Assignment.—This problem consists essentially of the development of the mechanism and the design of the parts shown in the detailed figures, *i.e.*, the *flanging mechanism*. For application of these parts to the machine, see catalog. Develop the mechanism so that the rollers will revolve about each other with a uniform clearance in all positions. Assume a maximum thrust at the roller of (10,000 to 100,000) pounds, and design the parts so they will be sufficiently rigid to protect from flexure and breaking, and so the pull on the hand wheel will be within the capacity of one man, say 150 lb.

CHAPTER XV

DESIGN NO. 3

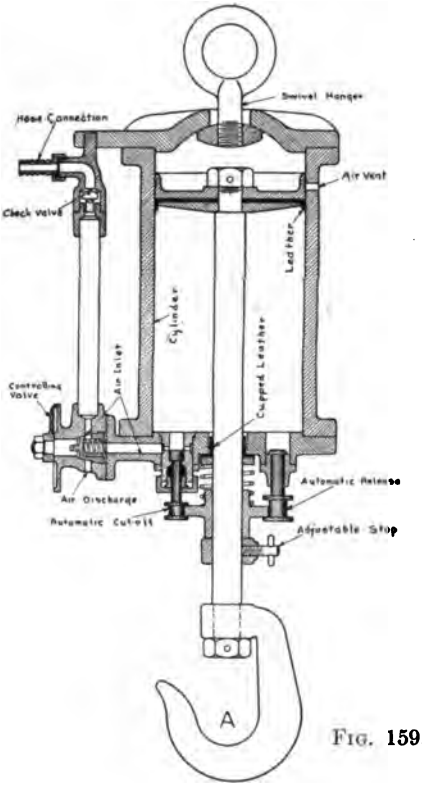

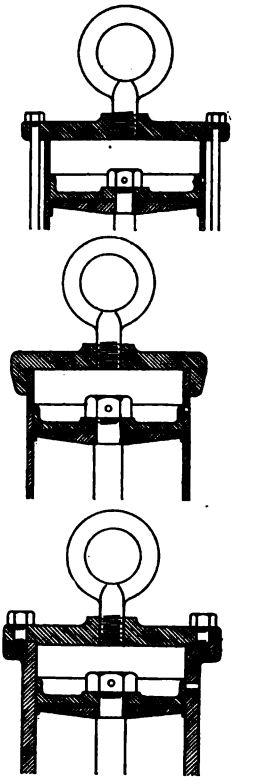

FIG. 159.

THE AIR HOIST. (Whiting Foundry Equipment Co.)

163. Assignment.—Capacity in free load..... lb.
Weight of parts and friction.....per cent
Air pressure (80 to 100)..... lb. per sq. in.
Lift (2 to 4)..... ft.

The following data may be used for checking, air at 80 lb. per square inch.

Diam. of hoist	Size of pipe	Air consumed per 4-ft. lift
3 in.	½ in.	1.17 cu. ft.
7 in.	¾ in.	6.63 cu. ft.
10 in.	1 in.	13.50 cu. ft.
16 in.	1 in.	34.49 cu. ft.

First Alternate, Design No. 3

The Allen Riveters

(Joseph T. Ryerson and Son Catalog)

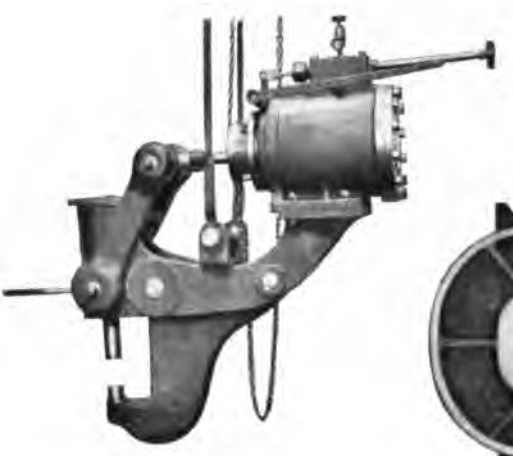

Fig. 160.
Lattice column type.

Fig. 161.
Jaw type.

In this type of machine the piston rods connect levers of different lengths, thus forming a toggle joint. It very properly embodies features of both designs, No. 1 and No. 2. It may be assigned as an advanced substitute for No. 1 or as an extra.

The following maximum pressures necessary to set rivets may be expected in average practice.

Diameter of rivets in inches	$\frac{1}{2}$	$\frac{5}{8}$	$\frac{3}{4}$	$\frac{7}{8}$	1	$1\frac{1}{8}$	$1\frac{1}{4}$	$1\frac{1}{2}$
Pressure in tons of 2000 lb.	25	30	40	50	65	80	100	150

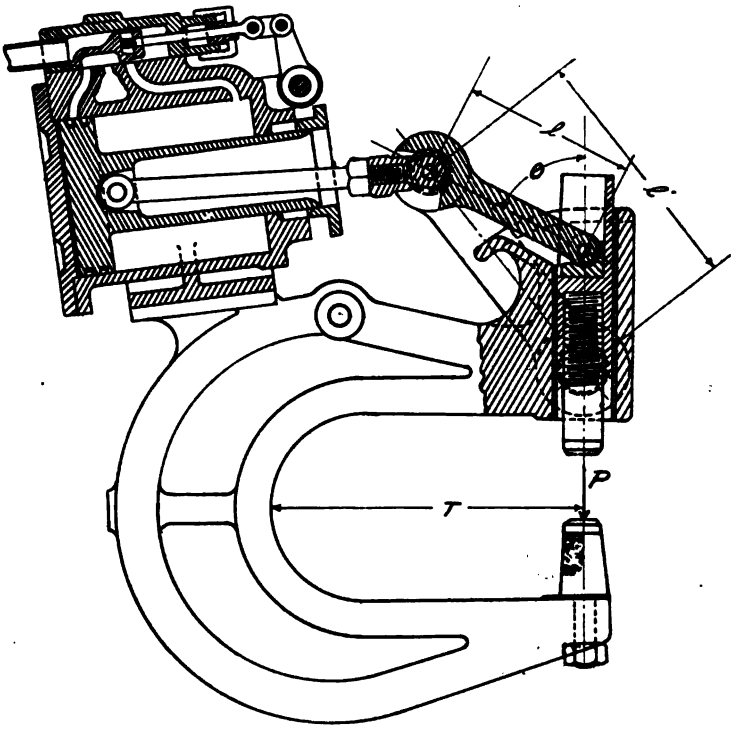

FIG. 162.

164. Assignment.—

P = (8000 to 50,000) ..... lb.
p = (Air pressure 80 to 100) ..... lb. per sq. in.
T = (4 to 12) L. C. type ..... in.
T = (16 to 66) J. type ..... in.
l = ... in.
l' = ... in.
θ (min.) = ... degrees.

Second Alternate, Design No. 3

FIG. 163.

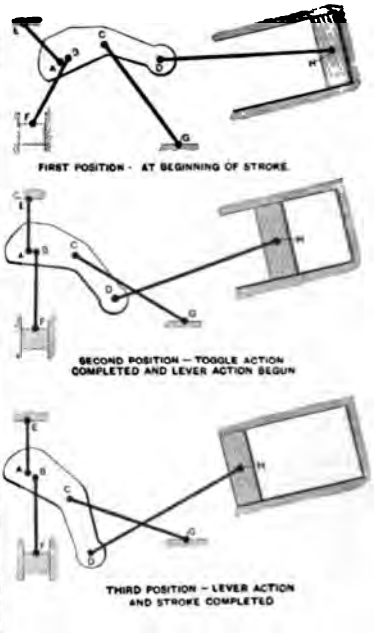

FIG. 164.—MECHANISM.

THE HANNA RIVETER

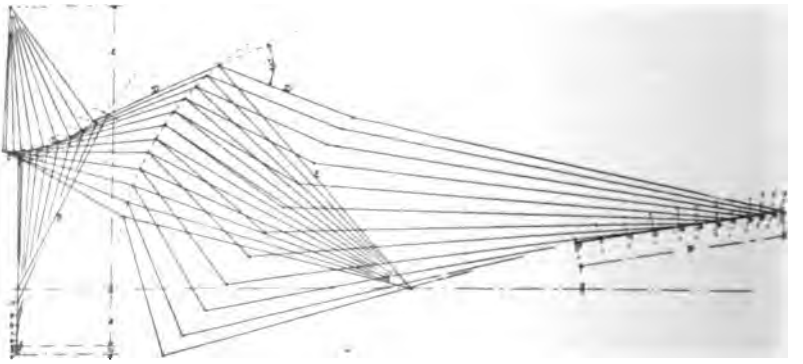

FIG. 165.—DEVELOPMENT OF THE MECHANISM.

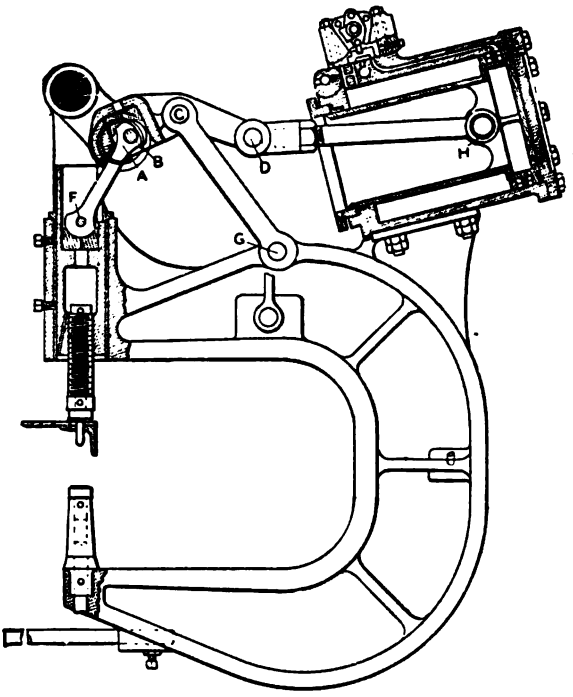

FIG. 166.

165. Assignment.—

$P = (50{,}000$ to $200{,}000)$ ..... lb.
$T = (10\frac{1}{2}$ to $66)$ ..... in.
Maximum movement of the die $(O + N)$ ..... in.
Air pressure ..... lb. per sq. in.

Assign Plunger Travel, $O + N$

Approximate other dimensions to table

A	B	C	D	D'	E	F	M	N	O	P
9	12	1	$7\frac{1}{2}$	9	18	26	$8\frac{3}{4}$	$3\frac{1}{2}$	$\frac{1}{2}$	12

First calculate and obtain the sizes for the frame, then give lengths and locate levers EA, BF, CG and DH such that the first half of the piston movement will cause a constantly decreasing velocity of the die, and the last half of the piston momement will cause a uniform velocity of the die. As an illustration of the above: in one machine the piston movement was 12 in., the total movement of the die was 4 in., the first 5 in. of piston travel gave a constantly decreasing velocity of the die through $3\frac{1}{2}$ in. of the die movement, leaving the last 7 in. of piston movement to produce a uniform velocity of the die through the last half inch of die movement.

Third Alternate, Design No. 3

FIG. 167.

THE ALLIGATOR RIVETER
(Jos. T. Ryerson and Son. Catalog)

166. Assignment.—(See Notation on First Alt. No. 3.)

P = (25 to 65) ..... tons.
p = (air pressure, 80 to 100) ..... lb. per sq. in.
T = (9 to 14) ..... in.
θ (min.) = ... degrees.
Maximum movement of the dies (2 to 4) ..... in.

Assume the length of the arm of the scissors such that the force to be transmitted through the toggle will not be so great as to require too large a cylinder. Also observe that a long arm requires a long toggle link and hence a long piston movement. This style of machine is used largely in structural and car shops. It may be made vertical or horizontal type. The dies are adjustable. The height of the gap varies from 6 to 14 in.

Fourth Alternate, Design No. 3

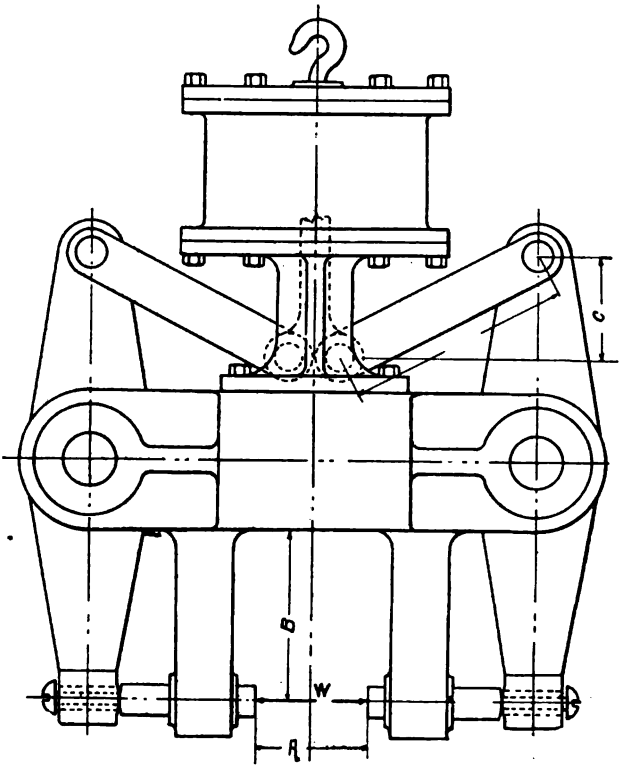

FIG. 168.

MUDRING RIVETER

167. Assignment.—

W = (25,000 to 100,000) ..... lb.
p = (air pressure, 80 to 100) ..... lb. per sq. in.
$T = B$ = (8 to 16) ..... in.
A = (5 to 8 ..... in.
C (min.) when θ = ... degrees.
Total die movement (3 to 5) ..... in.

This design may be modified by having the cylinder enclosed within the base if desired. In such an arrangement the piston rod becomes a compression member. Design also for air pipes and valves.

Fifth Alternate, Design No. 3

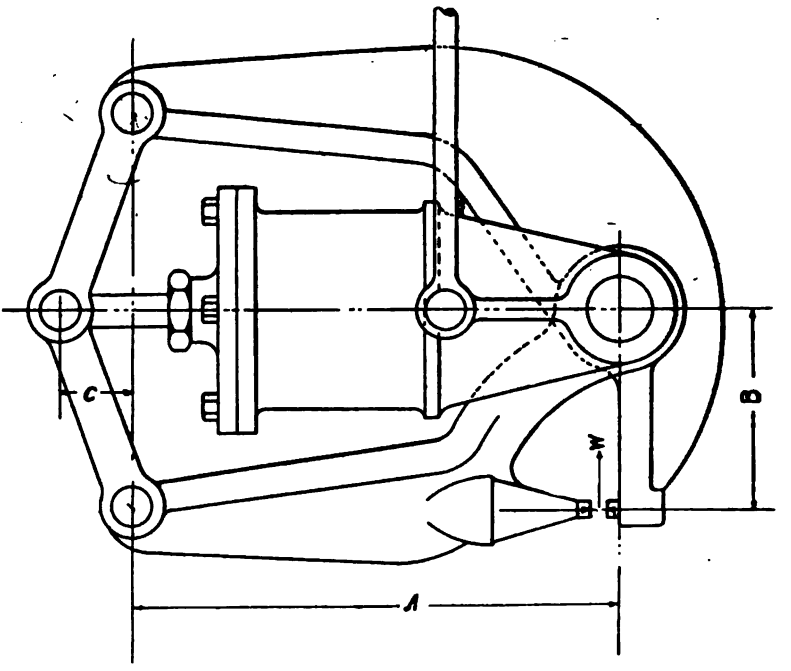

FIG. 169.

LEVER RIVETER

168. Assignment.—

W = (20,000 to 60,000) ..... lb.
p = (air pressure, 80 to 100) ..... lb. per sq. in.
T = (throat, 8 to 12) ..... in.
A = (20 to 36) ..... in.
C (min.) when θ = ... degrees.
Total die movement (2 to 3) ..... in.

When the arms are in their inner positions the cylinder must not touch them. Design also for air pipes and valves.

Sixth Alternate, Design No. 3

FIG. 170.
25 Ton Portable.

FIG. 171.
50 Ton Portable.

HYDRAULIC RIVETING MACHINE
(Niles-Bement-Pond Catalog)

169. Assignment.—

$P = (15–50)$ ..... tons.
$p = (800–1500)$ ..... lbs. per sq. in.
$T = (6–15)$ ..... in.
Size of rivet (see First Alt. Des. No. 3) ..... in.

In this design the cylinder, frame, supports and valves are important in the order named. The piping is a feature that can be modified to suit almost any condition of frame. Such machines are used on structural and bridge work.

Seventh Alternate, Design No. 3

Triple Pressure Hydraulic Riveting Machine

(Niles-Bement-Pond Company)

Fig. 172.

This machine is built with three capacities: 50, 100 and 150 tons, for driving $\frac{7}{8}$-, $1\frac{1}{4}$- and $1\frac{1}{2}$-in. rivets. The gap T is made in two lengths 12 and 17 ft. The cylinder is designed for three pressures of water, the highest being 1500 to 2000 lb. per square inch. By means of the three pressures provided as per section (see also catalog) the distributing valve is not needed.

On frame B is mounted cylinder A with main plunger E. To the main plunger can be attached, by means of the interrupted thread and nut J, the small plunger I. When so arranged plungers E and I move together and pressure on the dies is equivalent to the pressure p on the difference between the two areas. Small plunger can also be attached to main plunger so that intermediate sleeve H is locked to main plunger and moves with it. When so arranged the pressure on the dies is controlled by the difference between area of main-plunger and intermediate sleeve H. Cover F over die slide D contains the push back piston G bearing directly upon main plunger.

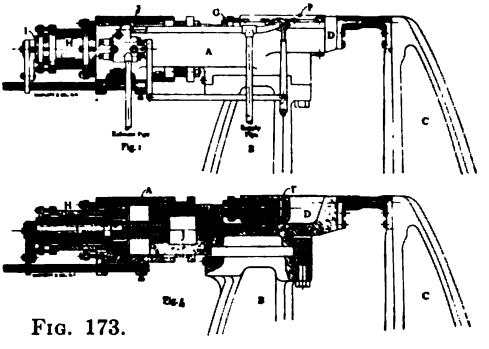

Fig. 173.

170. Assignment.—

$P = (50–150)$ tons. $p = (1500–2000)$ lbs. per sq. in. $T = (12–17)$ ft.

CHAPTER XVI

STUDIES IN THE KINEMATICS OF MACHINES.

The following problems in kinematics are given to supplement the work in both mechanism and design. One or more of these problems may be assigned between designs 1 and 2, also between 2 and 3 and will serve as a relaxation from the tedium of the longer problems of design. In their solution they contemplate pure mechanism (line motion) only and will not deal in any way with the strength or proportion of parts. The problems are arranged in a graduated series: first, those distinctly outlined and requiring little or no originality; second, those open to original ideas, but having one solution suggested, out of a number that might be made; third, those open to a number of solutions but requiring complete originality and invention.

A series of illustrative problems in the study of the mechanical movements of machines was given in the *Am. Mach.*, one problem each month, beginning December 1, 1904. In order that originality be developed, it is suggested that these problems be read in connection with the assignment given.

The kinematic problems relating to valve gears and link motions are classified at the last of the list and may be given between designs 2 and 3 or after design 3, so as to be taken in parallel with or after the subject of Engines and Boilers.

Kinematic Sheet No. 1

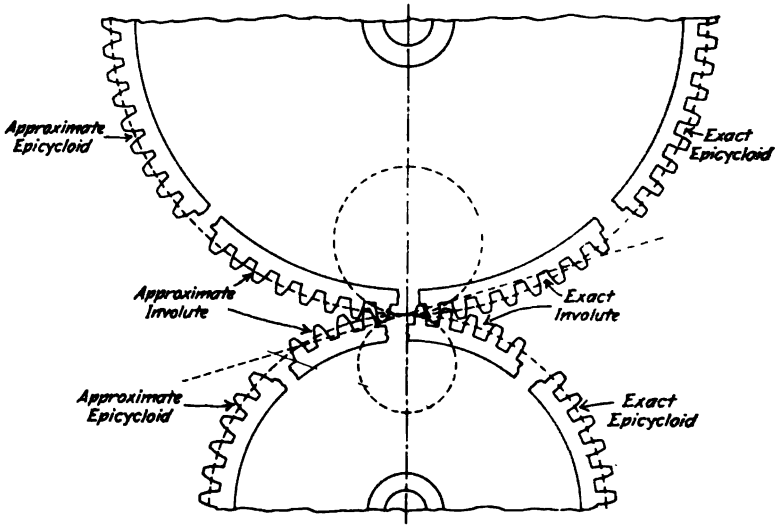

FIG. 174.

171. Assignment.—Given, a problem by which the diameters of the gears may be obtained. It is required to construct the tooth outlines for each by means of the following systems:

Exact epicycloidal
Exact involute
Approximate epicycloidal
Approximate involute.

Kinematic Sheet No. 2

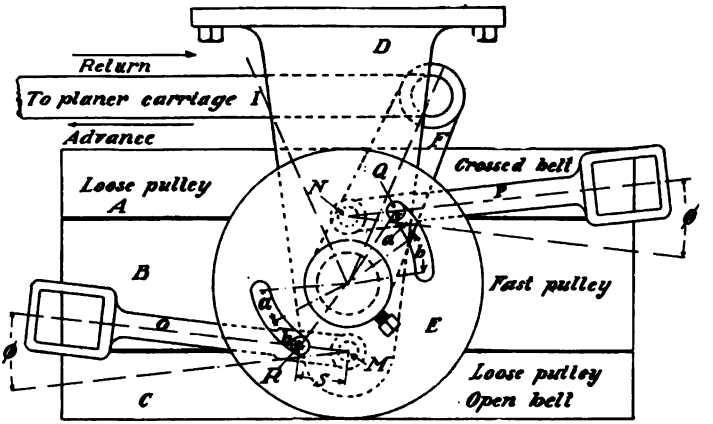

a. Arc of circle.
b. Arc of cam.

FIG. 175.
PLANER CAM

172. Assignment.—

A and *C* are loose pulleys, *B* is a tight pulley.
D is fastened to frame of planer.
I moves back and forth, oscillating link *F* about *G*.
E is rigidly connected to *F* by set screw.
Levers *O* and *P* are pivoted at *m* and *n* on *D*.
Q and *R* are rollers fastened to the shifting levers.
Pulley diameters (10–24) ..... in.
S = ... in.
Width of fast pulley (3–10) ..... in.
Width of loose pulleys, each, (2–8) ..... in.

Construct curve of cam so that the shifter will be constantly accelerated during first half of its motion and constantly retarded during latter half.

During the first half of the motion of *E* (or *F*), one shifter arm moves outward, while the other arm remains stationary (in the outward position). During the second half of the motion of *E*, the second shifter arm moves inward, while the first arm remains stationary (in the outward position). Place the points *Q* and *R* respectively directly above and below the center of rotation of the cam *E*.

Kinematic Sheet No. 3

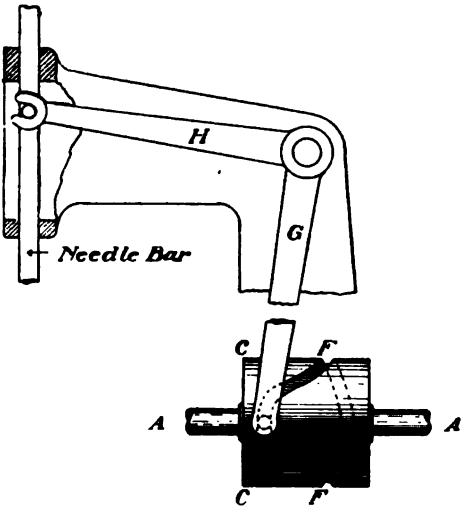

FIG. 176.

CAM OF HOME SEWING MACHINE

173. Assignment.—

Diameter of cylinder ($1\frac{1}{4}$–$3\frac{1}{2}$) ..... in.
Depth of groove ($\frac{3}{16}$–$\frac{1}{2}$) ..... in.
Diameter of roller ($\frac{3}{16}$–$\frac{5}{8}$) ..... in.
Stroke of bar (1–3) ..... in.
Length of arm G (6–10) ..... in.
Length of arm H (10–18) ..... in.

Design a cylindrical cam similar to that shown in the sketch to engage a rocker arm. Divide the motion into 24 time periods. The follower is to move with a constant acceleration during four time periods; during the next eight periods it is to move uniformly with the velocity attained; during the next four periods it is to come to rest with a constant retardation. The return motion consists of eight time periods; during the first four periods it is to be constantly accelerated and during the remaining four periods it is to be constantly retarded.

Required full projection of cam outline on the cylinder. This will require the development of the cylinder at top and bottom of groove.

Kinematic Sheet No. 4

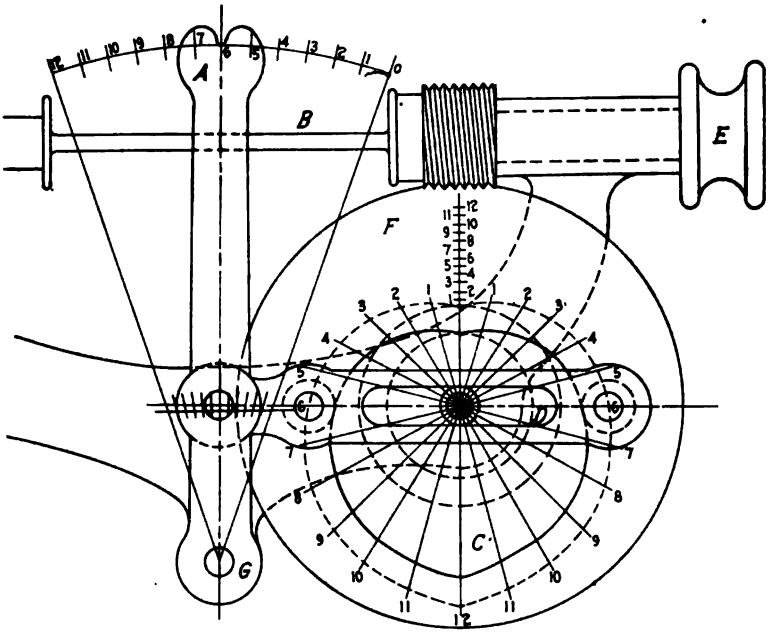

FIG. 177.

SEWING MACHINE BOBBIN WINDER

174. Assignment.—

Number of threads to be laid per inch of spool length (30–100)
Length of spool ($1\frac{1}{2}$–$2\frac{1}{2}$)..... in.

Kinematic Sheet No. 5

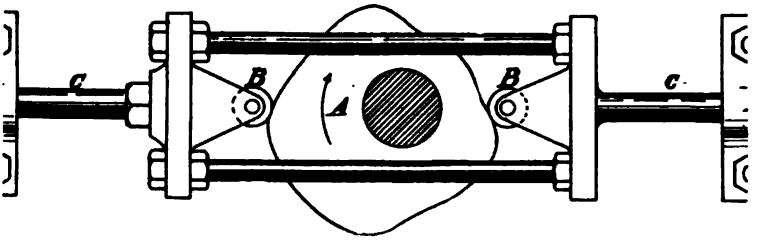

FIG. 178.

175. Assignment.—

Design the constant diameter cam, *A*, as shown, under the following conditions: follower to move with harmonic motion from extreme right to left; to return one-half the distance by uniform motion; to remain at rest for one-sixth the revolution of the cam, and to return to starting point by uniform motion. Total stroke of follower in one direction = ... in.

Kinematic Sheet No. 6

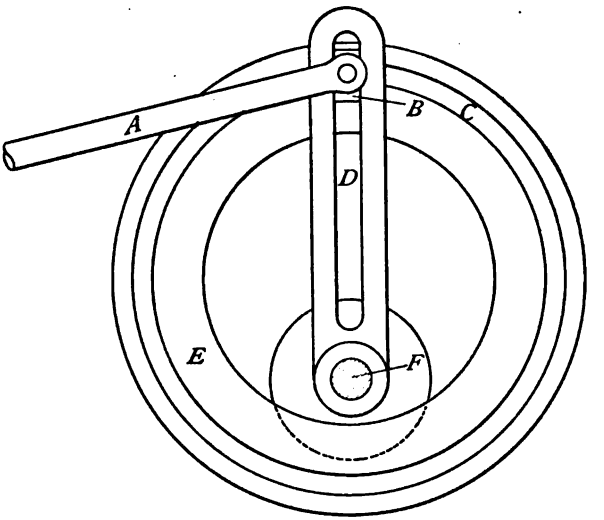

FIG. 179.

QUICK RETURN MECHANISM

176. Assignment.—

Length of lever, A (18–24) ..... in.
External diam. of circular slot (8–10) ..... in.
Distance from center of rotating shaft, F, to center of circular slot (4–10) ..... in.

Plot velocity-time diagram of crosshead at end of arm A, which moves along a horizontal line through F.

Kinematic Sheet No. 7

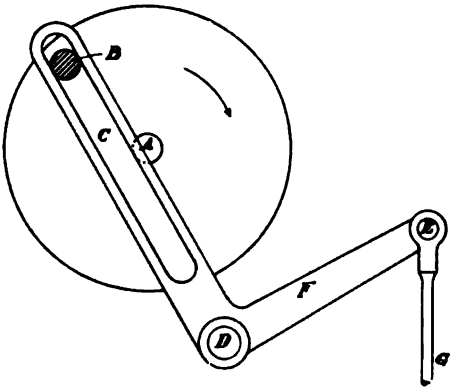

FIG. 180.

QUICK RETURN MECHANISM

177. Assignment.—

Radius of pin B from A (8–16)..... in.
Distance from A to D (18–24)..... in.
Distance of A above horizontal line through D..... in.

If B revolves with uniform rotation about A, plot the velocity-time diagram of block at lower end of EG.

Kinematic Sheet No. 8

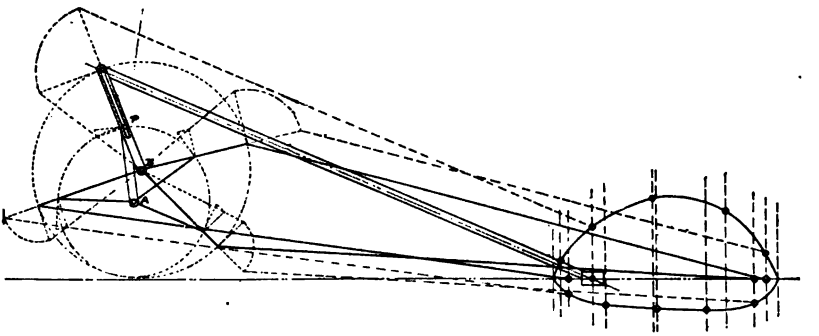

FIG. 181.

178. Assignment.—Lay out a Whitworth Quick Return motion, with the path of the tool below the center B of the slotted crank BP, according to the following data:

Length of stroke..... in.
Length of connecting rod..... in.
Length of A. P..... in.
R.p.m. of crank.....
Period of advance to return of tool = 2 : 1
Construct the linear velocity-space diagram of the tool.

Kinematic Sheet No. 9

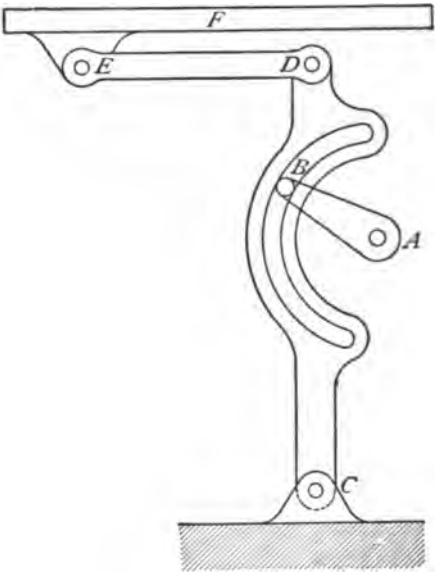

FIG. 182.

179. Assignment.—Assume center A directly above center C; also that slot in which B works is on the arc of a circle, with radius AB. Plot velocity-time diagram for member F if AB rotates continuously and members are proportioned as follows:

Length AB (6–12) ..... in.
Length CD (18–30) ..... in.
Length DE (16–20) ..... in.

Kinematic Sheet No. 10

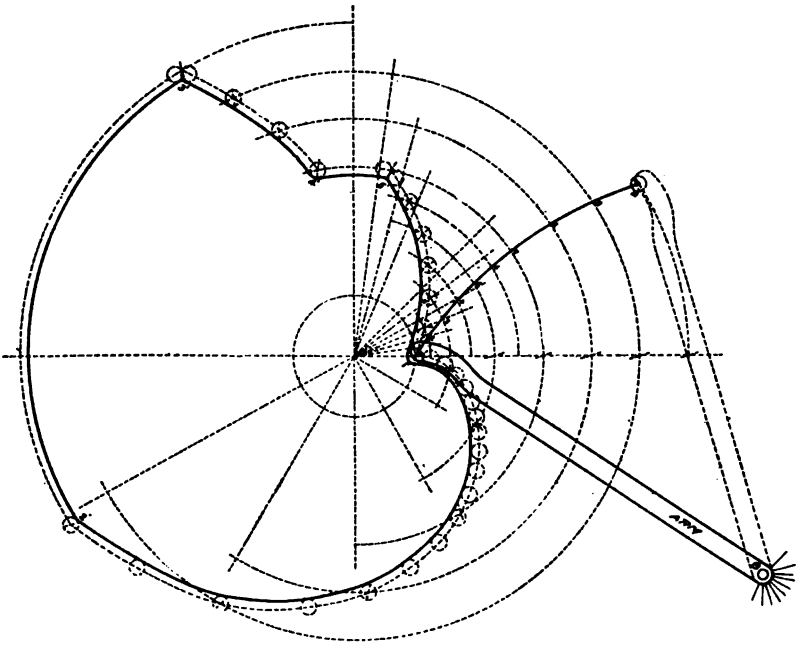

FIG. 183.

180. Assignment.—Having given an oscillating arm, pivoted at point *B*, design a cam to move the end of the arm over the path 1, 2, 3, 4, 5.....13. The cam may have a uniform or varying motion while the arm may move uniformly or according to any law of motion desired.

Kinematic Sheet No. 11

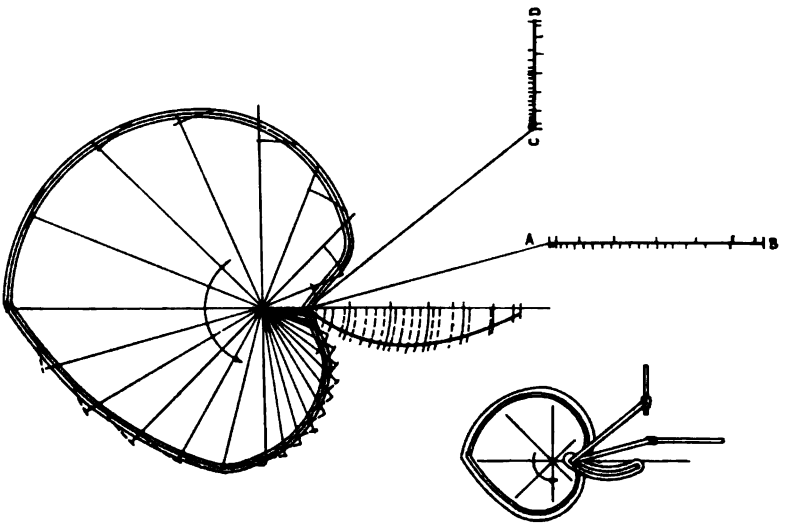

FIG. 184.

181. Assignment.—Two crossheads are to be driven in paths AB and CD intersecting at right angles. The length of the stroke, CD, is one-half that of AB. Motion is to be given to both crossheads by a single rotating cam. Such guides and connecting rods as are necessary may be employed. No part of the mechanism is to project within the angle DAB at any time. Motion away from A is to be according to the following schedule:

$\frac{1}{8}$ stroke, uniform acceleration.
$\frac{3}{8}$ stroke, uniform motion.
$\frac{1}{2}$ stroke, uniform acceleration.

Motion toward A to be harmonic.

Kinematic Sheet No. 12

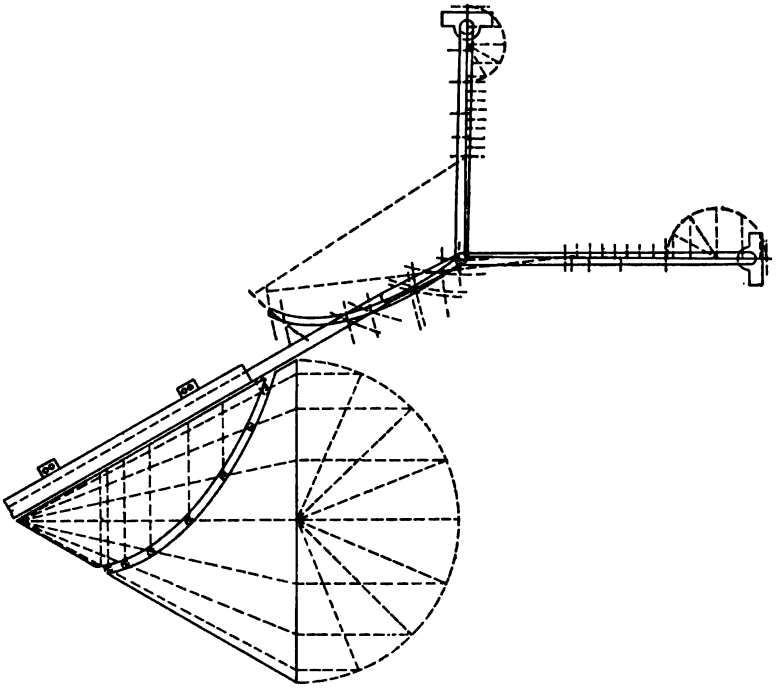

FIG. 185.

182. Assignment.—Let vertical crosshead be A, horizontal crosshead be B, the pin connection be C, then C will travel through the stationary cam curve as shown.

Length of horizontal connecting rod..... in.
Length of vertical connecting rod..... in.
Travel of horizontal crosshead..... in.
Travel of vertical crosshead..... in.

Crossheads to move out.....in. with uniform acceleration; out..... in. with uniform motion; out.....in. with uniform acceleration; and to move in.....in. with increasing harmonic motion; in.....in. with uniform motion and in .....in. with decreasing harmonic motion.

Develop both top and bottom of groove in cone cam.

Kinematic Sheet No. 13

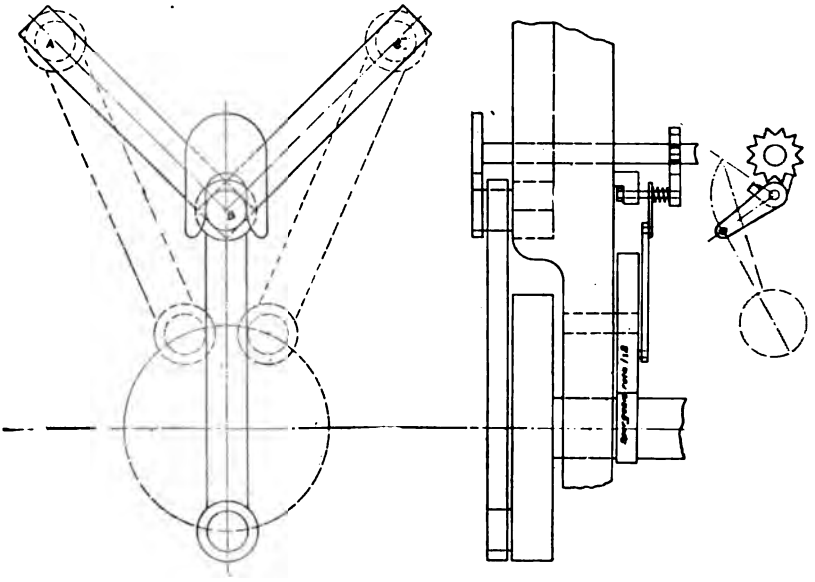

FIG. 186.

183. Assignment.—Having given the path of a groove *ABC*, a follower block is to move from *A* to *B* to *C* to *B* to *A*. Design a mechanism without the use of cams, and without allowing any part of the driving mechanism to extend within the angle *ABC*. Rack and pinion, or chain drives cannot be used directly to produce the motion.

Kinematic Sheet No. 14

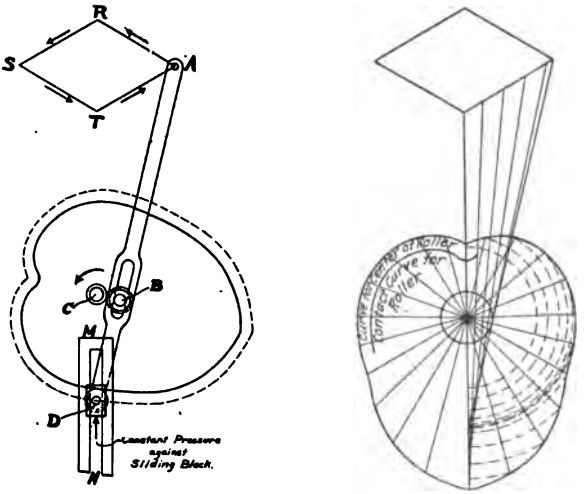

FIG. 187.

184. Assignment:—Having given any path *ARST* around which a point is to travel, design a mechanism to guide the point, the mechanism to have but one rotating shaft and one rotating disc cam, although other machine elements may enter into the construction. No part of the mechanism, excepting a single driving arm, shall project within the path *ARST*, or above the horizontal line drawn through *T*.

The movement of the point will be

A to R ( ) of period of rotation.
R to S ( ) of period of rotation.
S to T ( ) of period of rotation.
T to A ( ) of period of rotation.

Original Kinematic Problems

185. Assignment.—Sketches A to E show some of the common forms of paper clips on the market. The problem is to design cams, connecting levers and properly shaped dies to produce from a spool of wire some one of the forms indicated. Sketches may be taken as full size.

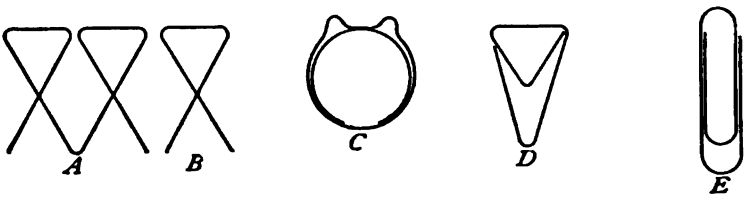

FIG. 188.

186. Assignment.—The path of a block consists of two parts, AB and BC. BC is $\frac{1}{2}$ the length of AB and perpendicular to AB. Motion cycle to be as follows:

$\frac{1}{8}$ B to A, uniform acceleration.
$\frac{3}{4}$ B to A, uniform motion.
$\frac{1}{8}$ B to A, uniform acceleration.
A to B, harmonic motion.
$\frac{1}{8}$ B to C, uniform acceleration.
$\frac{3}{4}$ B to C, uniform motion.
$\frac{1}{8}$ B to C, uniform acceleration.
C to B, harmonic motion.

The motion of the block is to be obtained from a single disc cam, and no part of the mechanism—excepting a single guiding arm to impart motion to block—shall extend outside the angle ABD, where D is on a continuation of CB. Use not more than two levers or bell cranks and no connecting links, and have block make complete cycle in one revolution of cam.

187. Assignment.—The path of a block is to be a square A, B, C, D, the block to be driven by a single cylindrical cam rotating with a vertical shaft, *i.e.*, shaft is perpendicular to plane

of path. No part of the driving mechanism is to operate in the plane of the square. The motion cycle is to be:

$\frac{1}{8}$ A to B, uniform acceleration.
$\frac{3}{4}$ A to B, uniform motion.
$\frac{1}{8}$ A to B, uniform acceleration.

This to be repeated for B to C, C to D, and D to A.

188. Assignment.—A follower block has motion along a path $ABCD$. AB and DC are each perpendicular to BC, on the same side, and at the ends of the line BC. In length, these path parts bear the following relations: $BC=2AB=1\frac{1}{4}DC$. One cylindrical cam is to be used, and no part of the driving mechanism is to extend within the figure $ABCD$, at any time during the motion, the cycle of which is to be:

$\frac{1}{4}$ B to C, constant acceleration.
$\frac{1}{2}$ B to C, uniform motion.
$\frac{1}{4}$ B to C, constant deceleration.
$\frac{1}{8}$ C to D, constant acceleration.
$\frac{3}{4}$ C to D, uniform motion.
$\frac{1}{8}$ C to D, constant deceleration.
D to C, same variations as B to C.
C to B, same variations as B to C.
B to A, A to B, harmonic motion.

189. Assignment.—A follower block is to move in a groove whose center line is ABC. BC is perpendicular to AB, and $\frac{3}{4}$ as long as AB. The motion is to be given by a single cylindrical cam, which may, however, carry more than one groove. Not more than two levers or bell cranks and not more than two connecting rods may be used. No part of the mechanism is to extend within the angle ABC, and the cam must lie in the angle made by prolonging AB and CB.

$\frac{1}{8}$ A to B, constant acceleration.
$\frac{3}{4}$ A to B, constant motion.
$\frac{1}{8}$ A to B, constant deceleration.
$\frac{3}{8}$ B to C, increasing harmonic.
$\frac{1}{4}$ B to C, constant motion.

$\frac{3}{8}$ B to C, decreasing harmonic.
$\frac{1}{4}$ C to B, constant acceleration.
$\frac{1}{2}$ C to B, constant motion.
$\frac{1}{4}$ C to B, constant deceleration.
$\frac{1}{4}$ B to A, increasing harmonic.
$\frac{1}{2}$ B to A, constant motion.
$\frac{1}{4}$ B to A, decreasing harmonic.

190. Assignment.—Block as follower to move in groove whose center line is ABC.

Block to be driven by two disc cams on the same shaft.

No part of mechanism, excepting a single driving arm, to extend inside the angle ABC or above the line ABD. Mechanism to be sufficiently substantial and positive for die work.

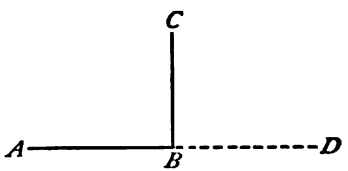

FIG. 189.

Motion to be as follows:

$\frac{1}{4}$ B to A, uniform acceleration.
$\frac{1}{2}$ B to A, uniform velocity.
$\frac{1}{4}$ B to A, uniform acceleration (decreasing).
A to B, harmonic motion (increasing and decreasing).
B to C, same as the first three above from B to A.
C to B, harmonic motion (increasing and decreasing).

191. Assignment.—Block as follower working in slot whose center line is ABC. To be driven by two cylindrical cams with axes at right angles to each other. No part of the mechanism to extend within the angle ABC.

Motion of block to be as follows:
$\frac{1}{8}$ BA to left, constant acceleration.
$\frac{1}{4}$ BA to left, constant velocity.
$\frac{1}{8}$ BA to left, constant acceleration.
$\frac{1}{2}$ AB to right, increasing and decreasing harmonic motion.

$\frac{1}{4}$ BA to left, constant acceleration.
$\frac{1}{2}$ BA to left, constant velocity.
$\frac{1}{4}$ BA to left, constant acceleration.
AB to right, increasing and decreasing harmonic motion.
$\frac{1}{4}$ BC up, constant acceleration.
$\frac{1}{4}$ BC up, constant velocity.
$\frac{1}{4}$ BC up, constant acceleration.

FIG. 190.

$$CB=\frac{AB}{2}.$$

$\frac{1}{2}$ BC down, harmonic motion.
$\frac{1}{4}$ BC up, constant acceleration.
$\frac{1}{4}$ BC up, constant velocity.
$\frac{1}{4}$ BC up, constant acceleration.
$\frac{1}{4}$ CB down, increasing harmonic motion.
$\frac{3}{8}$ CB down, constant velocity.
$\frac{3}{8}$ CB down, decreasing harmonic motion.

192. Assignment.—Path ABC of block as follower to be a groove. Block to move from A to B to C to B to A.

FIG. 191.

$$CB=\frac{1}{3}AB.$$

No cams are to be used in the mechanism, and no part of the driving mechanism is to extend within the angle ABC.

Rack and pinion or chain drive cannot be used directly to produce motion.

193. Assignment.—Block as follower to be driven in groove with center line ABC. No part of mechanism to extend within the angle ABC. Use one disc cam and one cylindrical cam. No bell cranks or pivoted levers can be employed. Motion of block to be as follows:

$\frac{1}{4}$ BA, constant acceleration.
$\frac{1}{2}$ BA, constant velocity.
$\frac{1}{4}$ BA, constant acceleration.
$\frac{3}{8}$ AB, harmonic motion increasing.
$\frac{1}{4}$ AB, constant velocity.
$\frac{3}{8}$ AB, harmonic motion decreasing.
$\frac{1}{4}$ BC, constant acceleration.
$\frac{1}{2}$ BC, constant velocity.
$\frac{1}{4}$ BC, constant acceleration.
CB, harmonic motion.

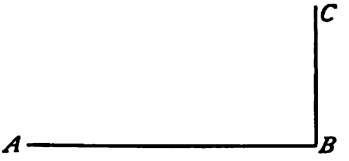

FIG. 192.
$CB = \frac{1}{2}AB$.

194. Assignment.—Block as follower to move in groove whose center line is ABC. Driven by a single cylindrical cam, which may, however, carry more than one groove. Not more than two levers or bell cranks and two connecting rods may be used.

No part of mechanism to extend within the angle ABC and the cam itself must be located in the angle DBE.

Motion of block to be as follows:

$\frac{1}{8}$ A to B, constant acceleration.
$\frac{3}{4}$ A to B, constant velocity.
$\frac{1}{8}$ A to B, constant acceleration.
$\frac{3}{8}$ B to C, increasing harmonic.
$\frac{1}{4}$ B to C, constant velocity.
$\frac{3}{8}$ B to C, decreasing harmonic.
$\frac{1}{4}$ C to B, constant acceleration.

$\frac{1}{2}$ C to B, constant velocity.
$\frac{1}{4}$ C to B, constant acceleration.
$\frac{1}{4}$ B to A, increasing harmonic.
$\frac{1}{2}$ B to A, constant velocity.
$\frac{1}{4}$ B to A, decreasing harmonic.

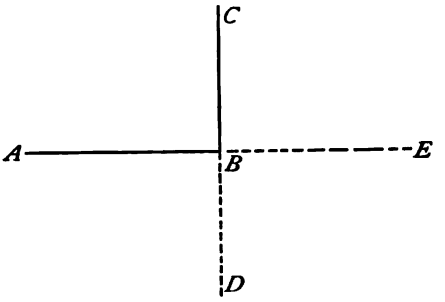

FIG. 193.
$BC = \frac{3}{4}AB$.

195. Assignment.—Block as follower to be driven in groove with center line ABC. No part of mechanism to extend within the angle ABC. Use one disc cam and one cylindrical cam. No bell cranks or pivoted levers may be employed.

FIG. 194.
$CB = \frac{1}{2}AB$.

Motion to be as follows:
$\frac{1}{4}$ BA, constant acceleration.
$\frac{1}{2}$ BA, constant velocity.
$\frac{1}{4}$ BA, constant acceleration (decreasing).
$\frac{3}{8}$ AB, harmonic motion (increasing).
$\frac{1}{4}$ AB, constant velocity.
$\frac{3}{8}$ AB, harmonic motion (decreasing).
BC, same motion as given in the first three above for B to A.
CB, with harmonic motion (increasing and decreasing).

196. Assignment.—Design a mechanism to drive a block over the path *ABCDCBA*.

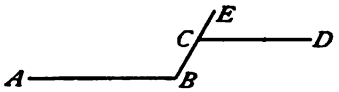

FIG. 195.

$CD = \frac{3}{4} AB.$

$CB = \frac{1}{3} AB.$

ABCED is center line of groove.
Use no cams, no chains, no racks.
Single rotating shaft.

197. Assignment.—Path *ABC* to be a groove. $CB = \frac{1}{2} AB.$
Block to be driven in this groove.

Motion to be obtained from a single disc cam and no part of the mechanism, excepting a single guiding arm to impart motion to block, to extend without the angle *ABD* at any time during the period of motion. Use not more than two levers or bell cranks and no connecting links.

Blocks to make complete cycle in one revolution of cam.

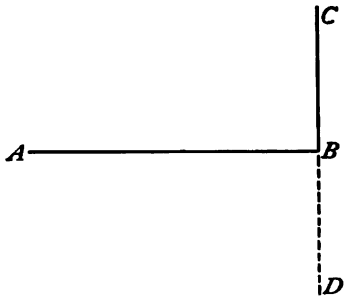

FIG. 196.

Motion of block to be as follows:

$\frac{1}{8}$ *B* to *A*, uniform acceleration.
$\frac{3}{4}$ *B* to *A*, uniform motion.
$\frac{1}{8}$ *B* to *A*, uniform acceleration.
A to *B*, harmonic motion.

$\frac{1}{8}$ B to C, uniform acceleration.
$\frac{3}{4}$ B to C, uniform motion.
$\frac{1}{8}$ B to C, uniform acceleration.
C to B, harmonic motion.

198. Assignment.—Construct cams and mechanism to drive a point over the path $ABCDCE$ and reverse. Use but one rotating shaft and not more than two cams, either disc or cylindrical. No part of the mechanism to extend within the angle ABD, or above the line DF.

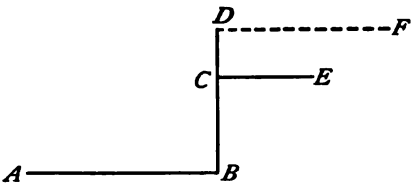

FIG. 197.

$CB = \frac{1}{2}\ AB.$
$CD = \frac{1}{2}\ CB.$
$CE = BD.$

199. Assignment.—$ABCDA$ is the center line of a groove. Design a mechanism to drive a square block over the groove. Use one rotating shaft, O.
There should be no opportunity for block to wedge at corners. Use no cams, chains, racks or screws.

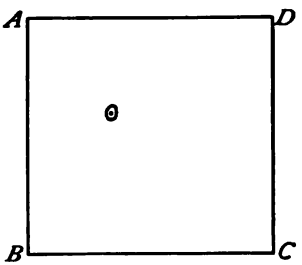

FIG. 198.

Following along the line of the above assignment, others may be made referring to a base runner around the base-ball diamond

using various forward and backward movements, and various constant velocities and accelerations.

200. Assignment.—Required to design the mechanism and cams to produce some word at the end of the pencil arm. The location of the parts should be selected so as to show the univer-

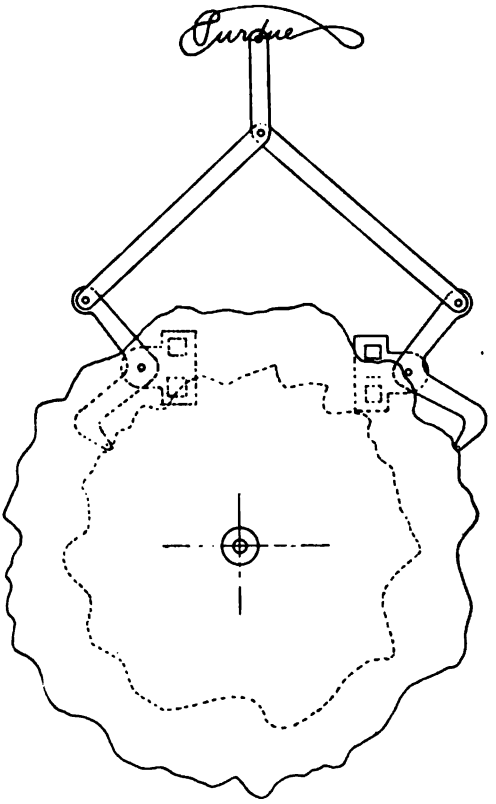

FIG. 199.

sality of the cam motion. All dimensions are to be selected by the student. Care should be exercised that the cam curves do not slope at too great an angle.

201. Assignment.—Required to design the mechanism and cams to produce some word at the end of the pencil arm. The

mechanism is to have but three moving parts. All dimensions are to be selected by the student. Care should be exercised that the cam curves do not slope at too great an angle.

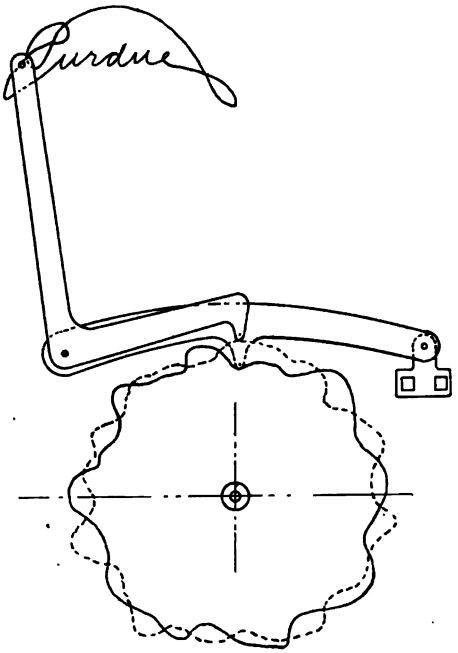

FIG. 200.

202. Assignment.—Required to design the mechanism for a writing cam as shown in Fig. 201. The sliding block X is moved by screw connection. All sizes to be selected by the student. Such a cam may be used for outlining any simple figure in design as well.

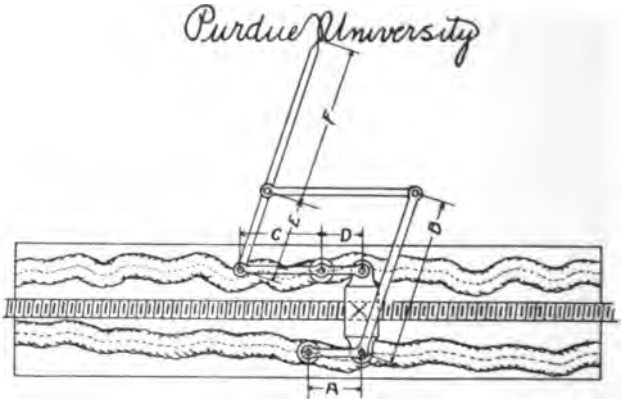

Fig. 201.

Mechanism of the Rites Inertia Governor

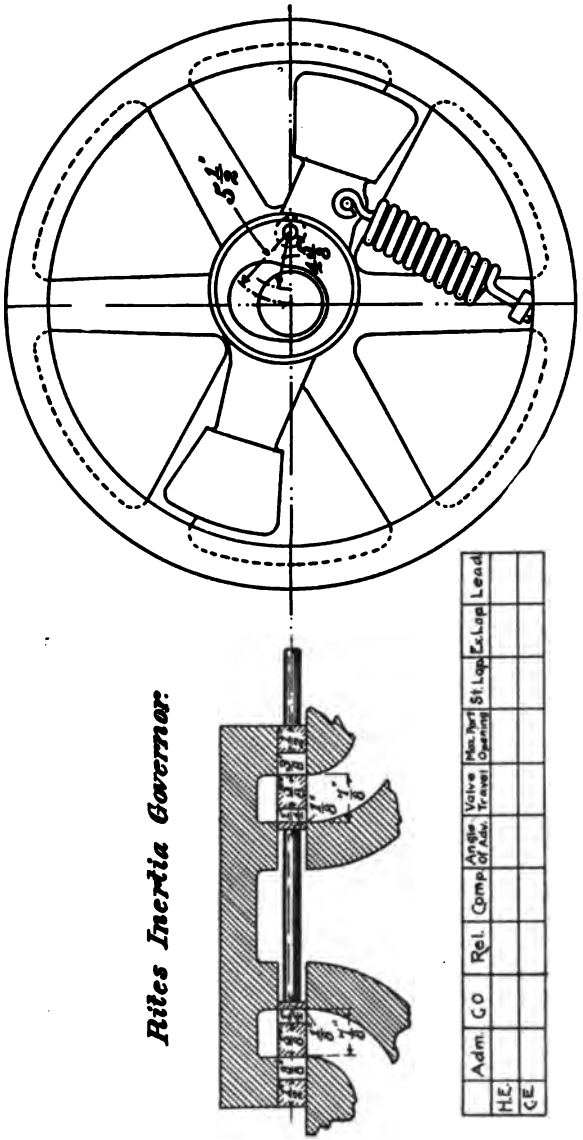

FIG. 202.

203. Assignment.—Make analysis of governor and Zeuner diagrams for three assigned cut-offs by either one of the two following methods:

(1) Equal cut-offs (20 per cent to 75 per cent).....per cent.
(2) Head end cut-offs (15 per cent to 80 per cent).....per cent.

Mechanism of the Centrifugal Governor

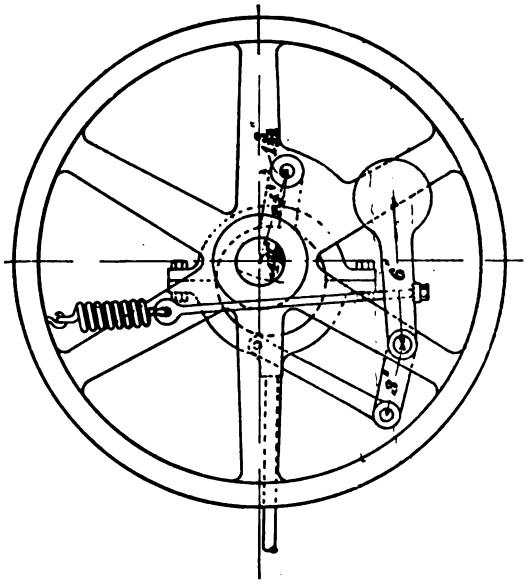

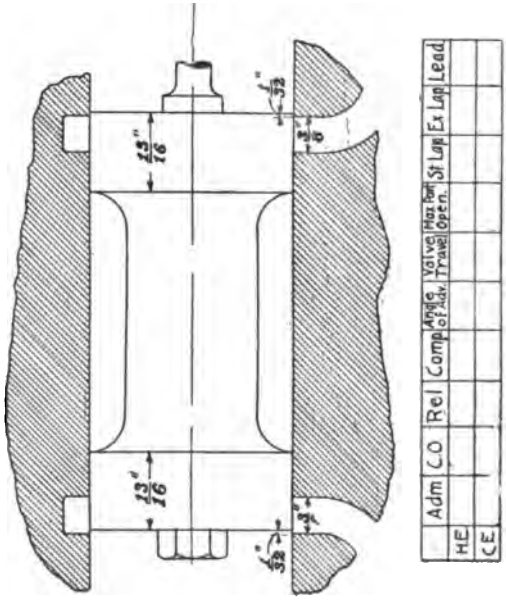

FIG. 203.

204. Assignment.—Make analysis of governor and Zeuner diagrams for three assigned cut-offs by either one of the two following methods:

(1) Equal cut-offs (20 per cent to 75 per cent)..... per cent.
(2) Head end cut-offs (15 per cent to 80 per cent)..... per cent.

Mechanism of the Straight Line Governor

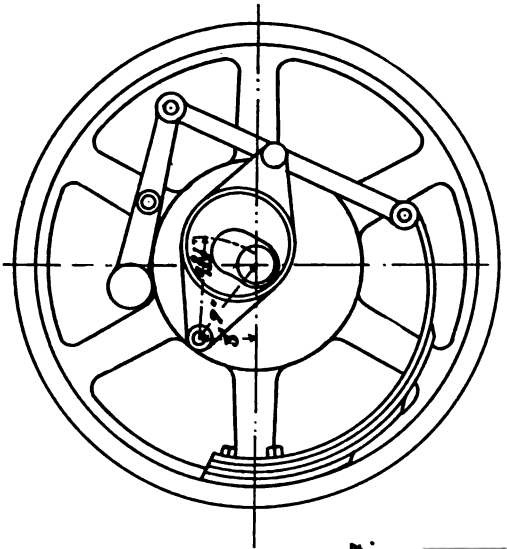

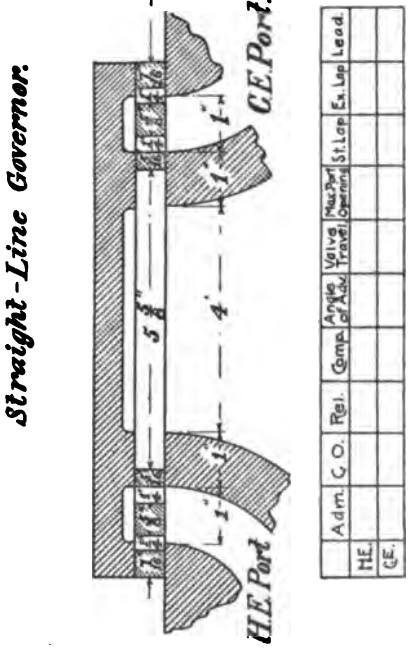

	Adm.	C.O.	Rel.	Comp.	Angle of Adv.	Valve Travel	Max. Port Opening	St. Lap	Ex. Lap	Lead.
H.E.										
C.E.										

FIG. 204.

205. Assignment.—Make analysis of governor and Zeuner diagrams for three assigned cut-offs by either one of the two following methods:

(1) Equal cut-offs (20 per cent to 75 per cent) ..... per cent.
(2) Head end cut-offs (15 per cent to 80 per cent) ..... per cent.

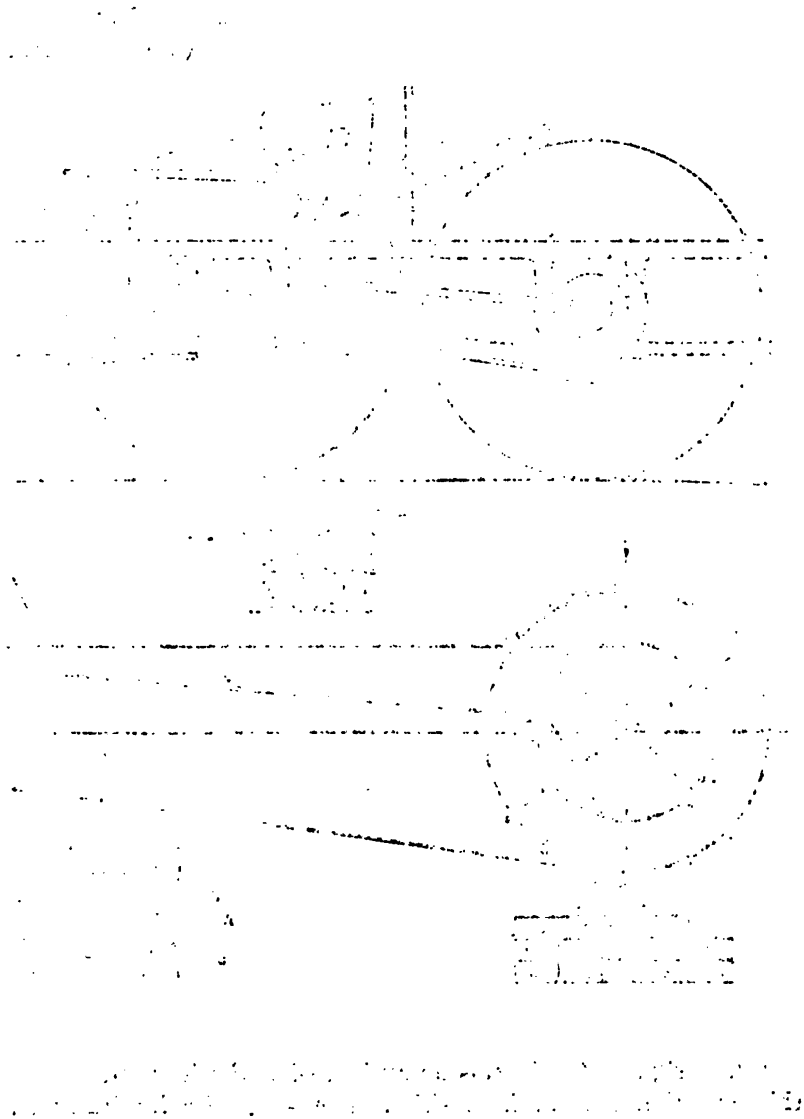

Mechanism of the
(See "Auchincl

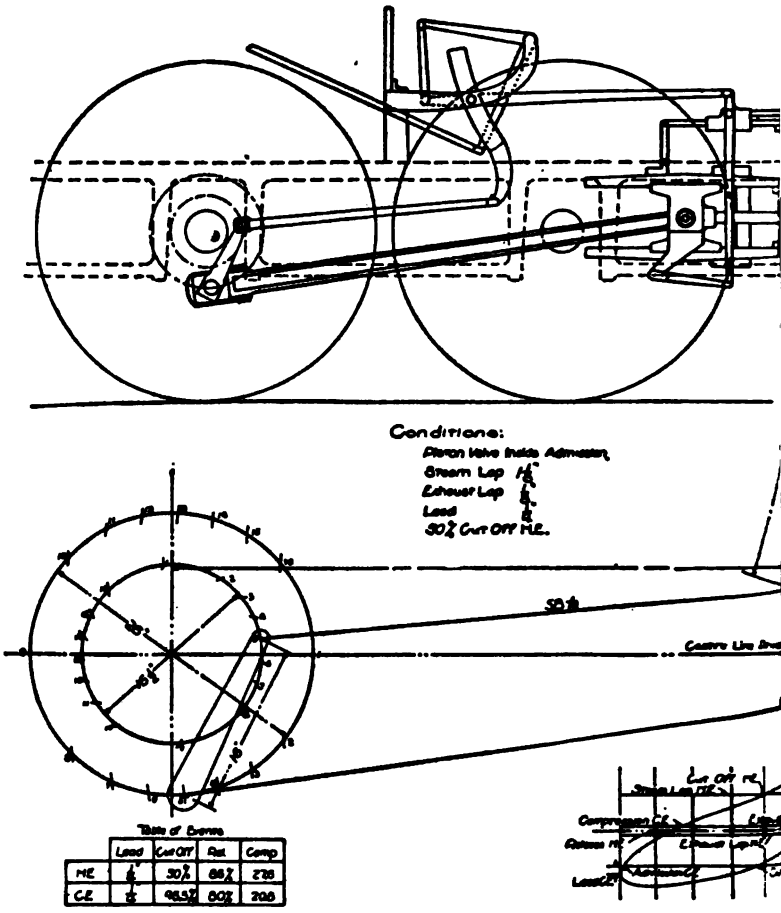

F

207. Assignment.—In this analysis assign the lead and the cu
this cut-off and draw in position of cut-off. Finally draw valv

schaert Valve Gear
Valve Motions)

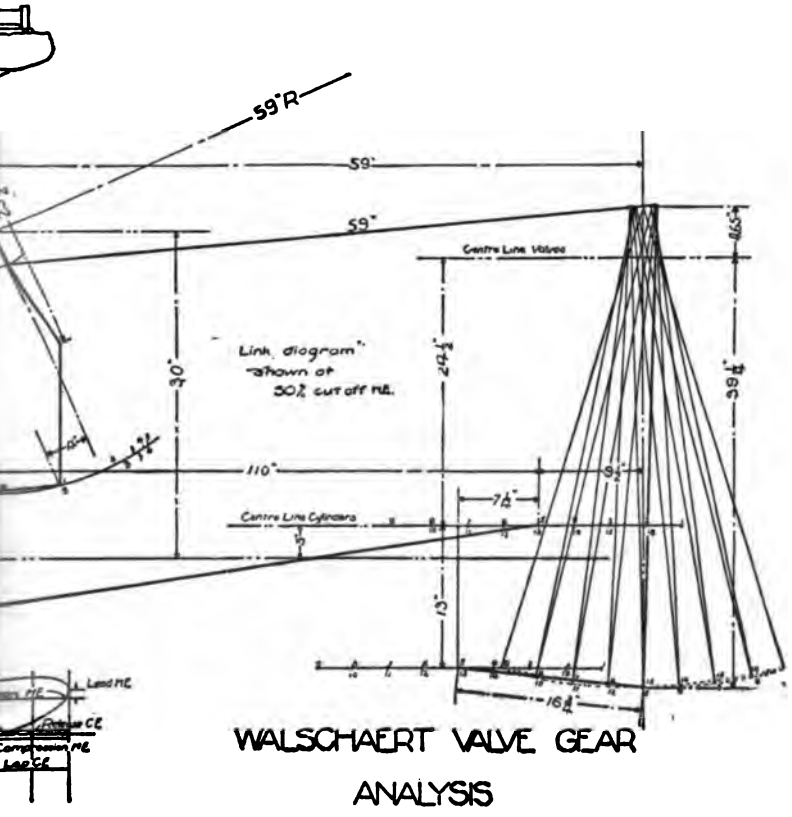

6.

(the latter varies from 20 to 80 per cent). Set the link to give
pse and fill in table of events.

Mechanism of the Stephenson Link

(See "Auchincloss" Valve Motions)

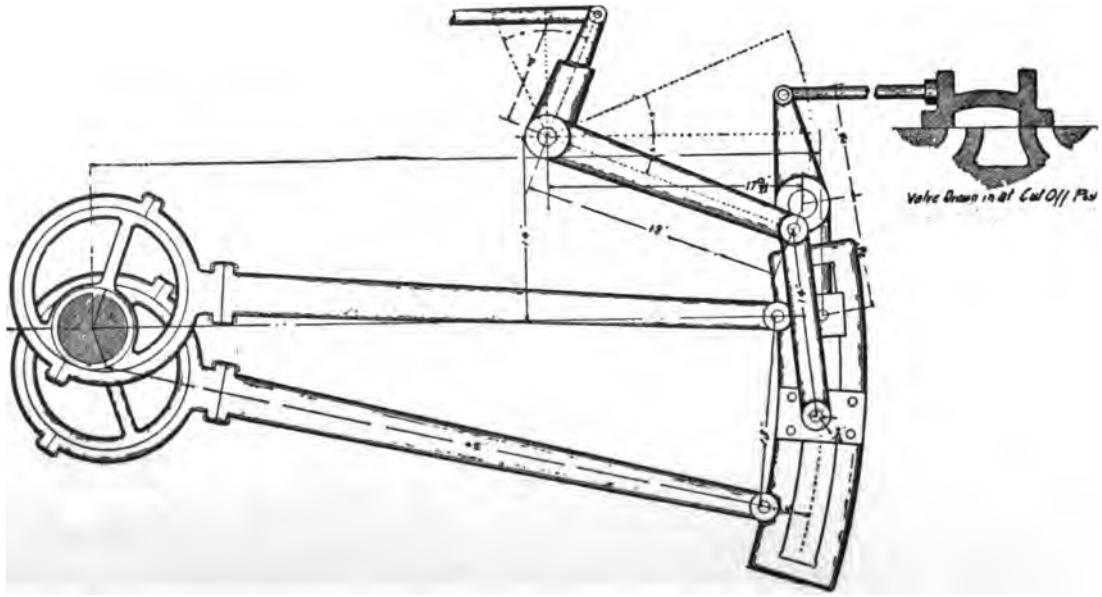

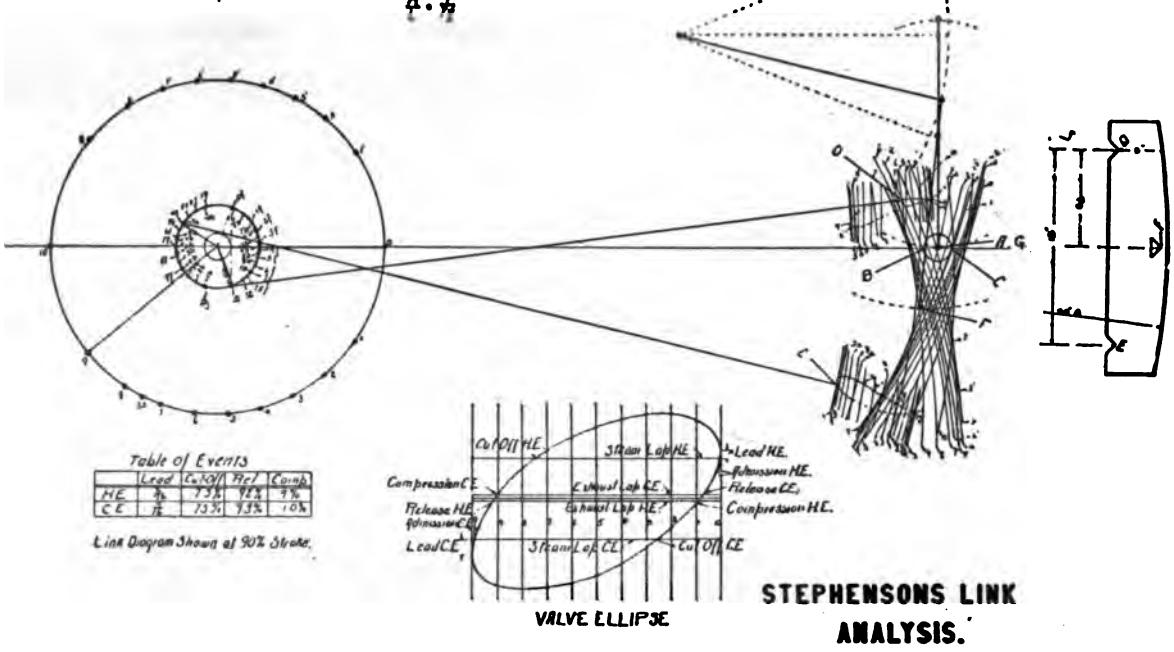

FIG. 205.

206. Assignment.—In this analysis, assign the cut-off (20 to 80 per cent) or the lead. Set the link to give this cut-off and draw in position of cut-off. Finally draw valve ellipse and fill in table of events.

INDEX

Abbreviations, 1
Air hoist, 299
Alloy steels, 14
Alloys, 15
Arms of gears, 196
Automobile clutches, 176

Ball bearings, design, 157
    endurance, 157
    journal, 153
    materials, 156
    step, 155
Beams, cast iron, 28
    formulas, 7
    uniform strength, 8
Bearings, adjustment, 129
    ball, 153
    experiments, 138
    friction, 134, 145
    heating, 136
    Hyatt, 160
    journal, 128
    lubrication, 131
    Mossberg, 164
    multiple, 149
    pressure, 134
    roller, 159
    sliding, 120
    step, 144
Belting, friction, 221
    slip, 223
    speed, 227
    strength, 225
    width, 226
Bevel shear, plain, 287
    rotary, 296
Bobbin winder, 313
Boiler, shells, 50
    tubes, 55
Bolts and nuts, 91
Brass, 16
Bronze, 16
Bulldozer, 293
Butt joints, 99

Cams, accelerating, 324
    conical, 321
    crosshead, 320
    lever, 319
    planer, 311
    sewing machine, 312
    steamboat, 314
    writing, 332
Caps and bolts, 142
Castings, iron, 10
    steel, 14
Chain drives, 197
Clip former, 324
Clutches, 173
    automobile, 176
    press, 280
Columns, 4
Cotters, 104
Cotton ropes, 231
Coupling bolts, 178
Couplings, 171
Crane hooks, 94
Cranks and levers, 200
Crucible steel, 13
Curved frames, design, 47
    tests, 42
Cylinders, steam, 78
    tests, 80
    thick, 51

Die heads, punch, 283
    sliding, 251
    stationary, 253
Discs, conical, 216
    logarithmic, 217

Discs, plain, 215
tests, 218
Drawings, size and scale, 236

Elliptic springs, 114

Factors of safety, 17
Fittings, pipe, flanged, 71
screwed, 69
Flanged fittings, 71
Flanging machine, 297
Flat plates, 83
springs, 113
Fly wheel, experiments, 207
press, 274
rims, 204
safe speeds, 205
Formulas, 3
Frames, curved, 42
design, 21
machine, 26
press, 255
riveter, 40
shape, 38
shear, 45, 266
stresses, 39
Friction, belting, 221
journals, 139
pivots, 145

Gears, bevel, 195
cut, 189
design, 310
rim and arms, 196
speed, 212
teeth, 186
Governor, centrifugal, 336
shaft, 337

Hangers, 182
Heating of journals, 136
Helical springs, 107
Hoist, air, 299
Hooks, crane, 94
Hoops, steel, 68
Hyatt bearings, 160

Iron, cast, 10
malleable, 11
wrought, 12

Joint pins, 104
Joints, rim, 210
Joints, riveted, butt, 99
diamond, 103
lap, 98
tube, 67
Journals, 128
strength of, 142

Keys, shafting, 178
Kinematics of machines, 309

Lap joints, 98
Lever design, 240
Link motion, Stephenson, 338
Walschaert, 339
Lubrication, 131

Machine frames, 26
screws, 93
supports, 25
Malleable iron, 11
Manganese, bronze, 16
steel, 14
Manila ropes, 229
Materials, 9
Metals, strength of, 18
Mossberg bearings, 165
Mushet steel, 15

Nickel steel, 14
Notation, 2

Open hearth steel, 13

Phosphor bronze, 16
Pipe, fittings, 69
tables, 56
Pivots, conical, 146
flat, 145
Schiele's, 147
Plates, flat, 83
steel, 87

Power press, 294
Press, foot power, 262
hand power, 261
power, 294
shear, 295
toggle joint, 235
Pulleys for press, 273
Punch, hand power, 263
horizontal, 288

Quick return, 315

Riveted joints, 96
Riveter, Allen, 300
alligator, 304
frames, 40
Hanna, 302
hydraulic, 307
lever, 306
mudring, 305
Riveting machine, hydraulic, 308
Roller bearings, 159
design, 163
step, 162
Rope transmission, cotton, 231
Manila, 229
strength, 230
wire, 232
Rotary shear, 295

Schiele's pivot, 147
Screw, design, 246
machine, 93
Sections, cast iron, 27
Shaft for press, 276
Shafting, bending, 169
clutches, 173
couplings, 171
diameter, 168
hangers, 182
keys, 178
Shapes of frames, 38
Shear press, clutches, 280
die head, 283
fly wheel, 274
forces, 272
frame, 45, 266
Shear press, gears, 277
pulleys, 273
shaft, 276
sliding head, 279
types, 284
Shear, rotary, 295
Shells, thin, 50
thick, 51
Silent chains, 199
Slides, angular, 120
circular, 124
flat, 122
gibbed, 122
Slip of belts, 223
Springs, elliptic, 114
experiments, 109
flat, 113
helical, 107
torsion, 112
Sprocket wheels, 197
Standard for press, 247
Steam cylinders, 78
Steel, alloys, 14
Bessemer, 13
castings, 14
crucible, 13
mushet, 15
open hearth, 13
plates, 87
Step bearings, 144
Stephenson link motion, 338
Strength of materials, 17
Stuffing boxes, 124
Supports, machine, 25

Tests of gears, experiments, 191
formulas, 190
practice, 193
proportions, 187
strength, 188
Thrust bearings, 150
Toggle joint press, alternate design, 260
analysis, 239
design No. 1, 235
die head, 250
frame, 255

Toggle lever, 240
screw, 246
standard, 247
toggle, 248
Torsion springs, 112
Tubes, boiler, 55
joints, 67
tests on, 62

Units, 1

Vanadium steel, 15

Walschaert link motion, 339
Wire ropes, 232
Wooden pulleys, 212
Writing cam, 332
Wrought iron, 12

THIS BOOK IS DUE ON THE LAST DATE
STAMPED BELOW

AN INITIAL FINE OF 25 CENTS
WILL BE ASSESSED FOR FAILURE TO RETURN
THIS BOOK ON THE DATE DUE. THE PENALTY
WILL INCREASE TO 50 CENTS ON THE FOURTH
DAY AND TO $1.00 ON THE SEVENTH DAY
OVERDUE.

FEB 6 1938

APR 26 1937

MAR 22 1941

MAY 7 1941 M

MAY 25 1948

LD 21-2m-1,'38 (52m)

YC 12695

UNIVERSITY OF CALIFORNIA LIBRARY